ANT SWITCH

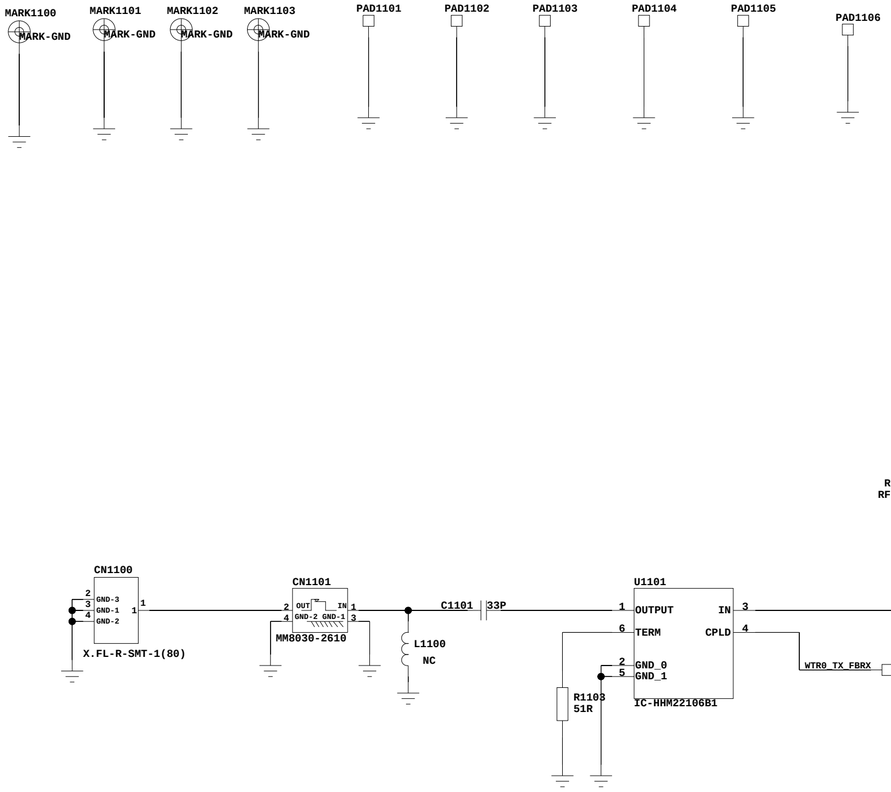

B34/39 LPF

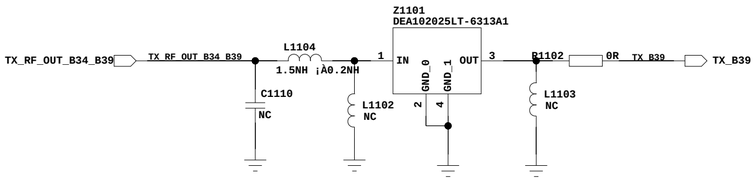

MMMB PA

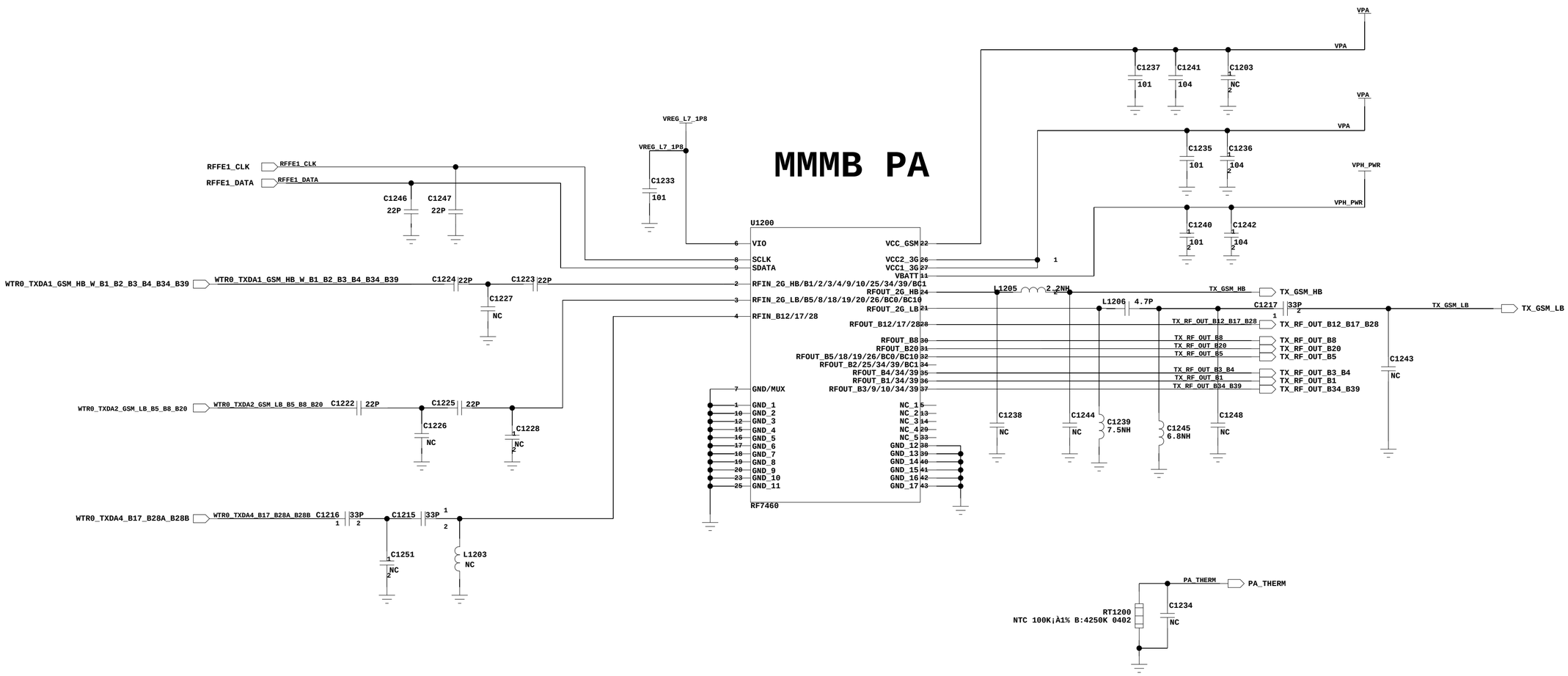

QFE2101

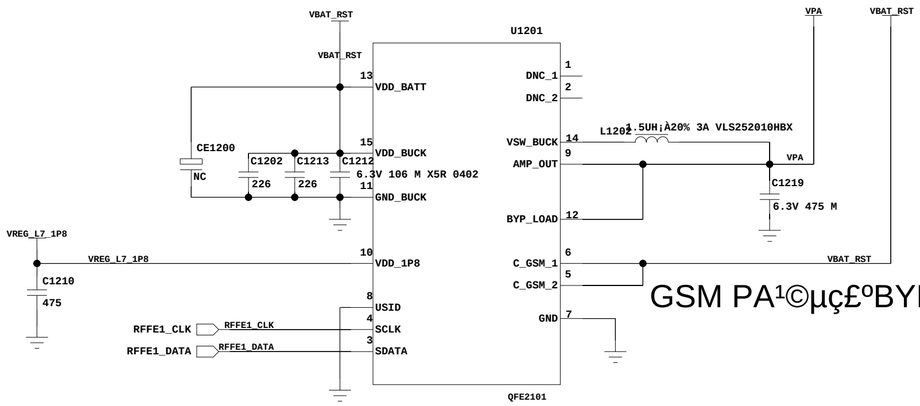

GSM PA¹©µç£ºBYPASSÄ£Ê½

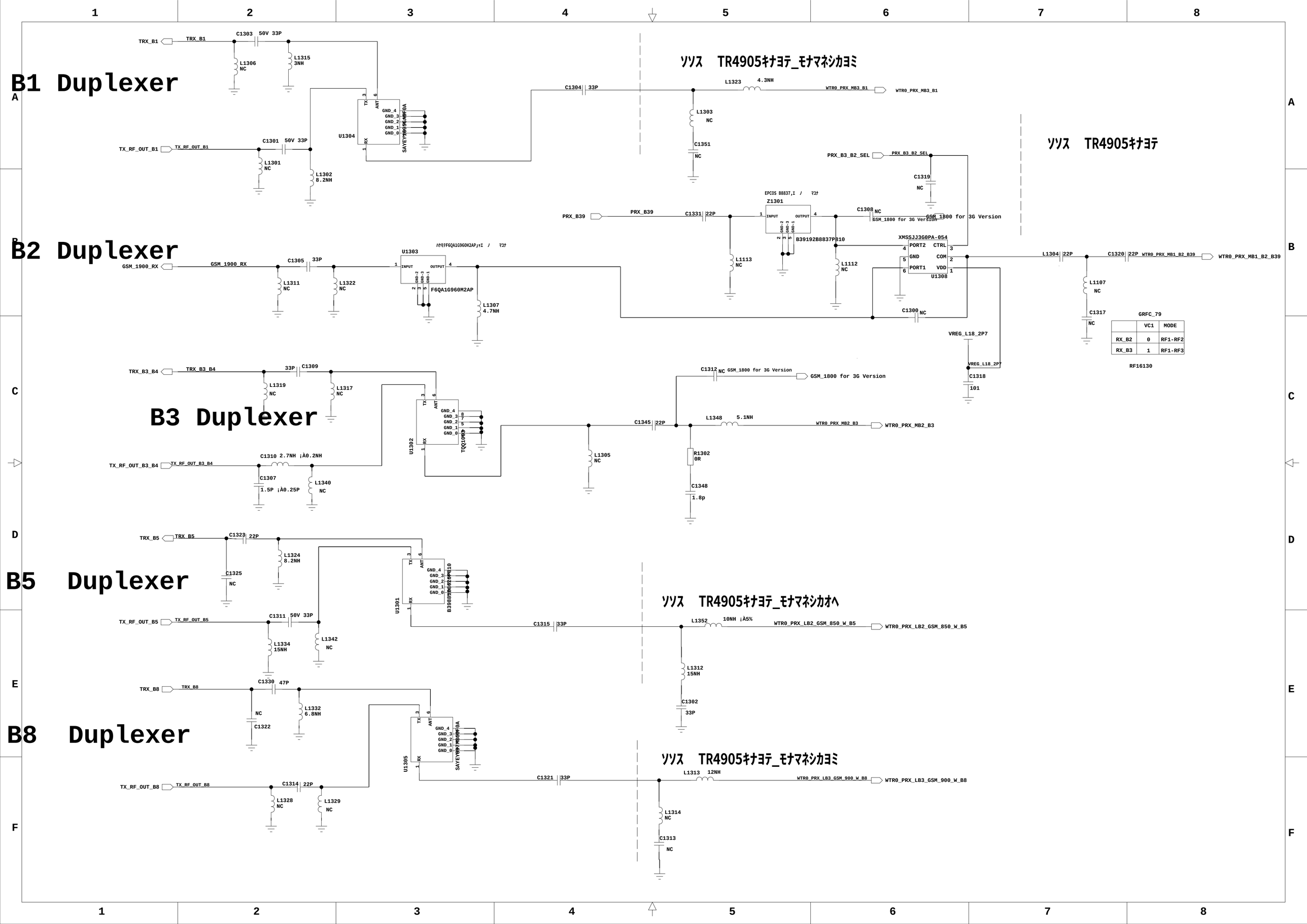
B1 Duplexer
B2 Duplexer
B3 Duplexer
B5 Duplexer
B8 Duplexer
ソソス TR4905キナヨテ_モナマネシカヨミ
ソソス TR4905キナヨテ
ソソス TR4905キナヨテ_モナマネシカオヘ
ソソス TR4905キナヨテ_モナマネシカヨミ
TRX_B1
TRX_B1
C1303 50V 33P
L1306 NC
L1315 3NH
TX_RF_OUT_B1
TX_RF_OUT_B1
C1301 50V 33P
L1301 NC
L1302 8.2NH
U1304
SAYEY036SMF0A
C1304 33P
L1323 4.3NH
WTR0_PRX_MB3_B1
WTR0_PRX_MB3_B1
L1303 NC
C1351 NC
PRX_B3_B2_SEL
PRX_B3_B2_SEL
C1319 NC
PRX_B39
PRX_B39
C1331 22P
Z1301
INPUT
OUTPUT
C1308 NC
GSM_1800 for 3G Version
GSM_1800 for 3G Version
B39192B8837P810
L1113 NC
L1112 NC
XMSSJJ3G0PA-054
PORT2
CTRL
GND
COM
PORT1
VDD
U1308
L1304 22P
C1320 22P
WTR0_PRX_MB1_B2_B39
WTR0_PRX_MB1_B2_B39
L1107 NC
C1317 NC
GRFC_79
VC1
MODE
RX_B2
0
RF1-RF2
RX_B3
1
RF1-RF3
RF16130
GSM_1900_RX
GSM_1900_RX
C1305 33P
L1311 NC
L1322 NC
U1303
F6QA1G960M2AP
L1307 4.7NH
C1300 NC
VREG_L18_2P7
VREG_L18_2P7
C1318 101
TRX_B3_B4
TRX_B3_B4
33P C1309
L1319 NC
L1317 NC
C1312 NC
GSM_1800 for 3G Version
GSM_1800 for 3G Version
U1302
TQQ1003
C1345 22P
L1348 5.1NH
WTR0_PRX_MB2_B3
WTR0_PRX_MB2_B3
L1305 NC
R1302 0R
C1348 1.8p
TX_RF_OUT_B3_B4
TX_RF_OUT_B3_B4
C1310 2.7NH ¡À0.2NH
C1307 1.5P ¡À0.25P
L1340 NC
TRX_B5
TRX_B5
C1323 22P
L1324 8.2NH
C1325 NC
U1301
B39882B8670P810
TX_RF_OUT_B5
TX_RF_OUT_B5
C1311 50V 33P
L1334 15NH
L1342 NC
C1315 33P
L1352 10NH ¡À5%
WTR0_PRX_LB2_GSM_850_W_B5
WTR0_PRX_LB2_GSM_850_W_B5
L1312 15NH
C1302 33P
TRX_B8
TRX_B8
C1330 47P
NC C1322
L1332 6.8NH
U1305
SAYEY097MSMF0A
TX_RF_OUT_B8
TX_RF_OUT_B8
C1314 22P
L1328 NC
L1329 NC
C1321 33P
L1313 12NH
WTR0_PRX_LB3_GSM_900_W_B8
WTR0_PRX_LB3_GSM_900_W_B8
L1314 NC
C1313 NC

B7 TRX

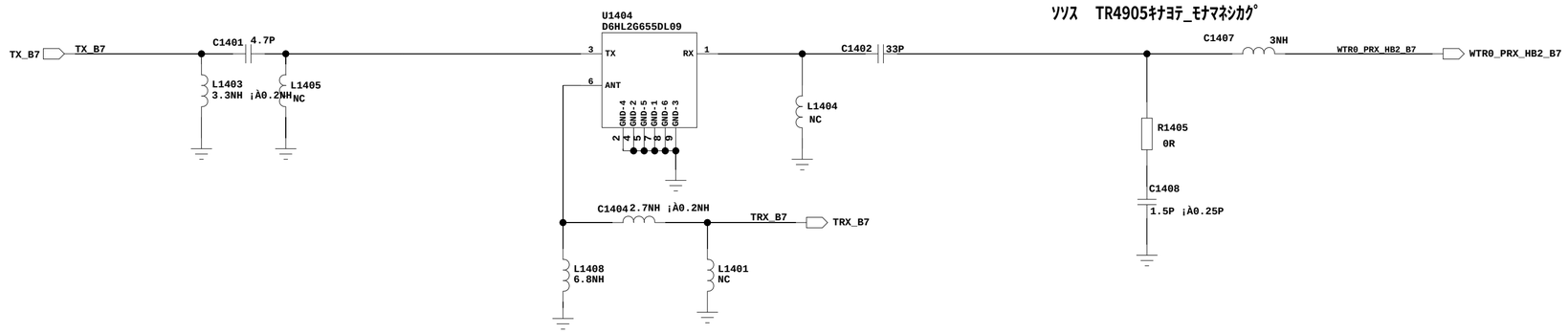

PRX B7 & B38_B41 Switch

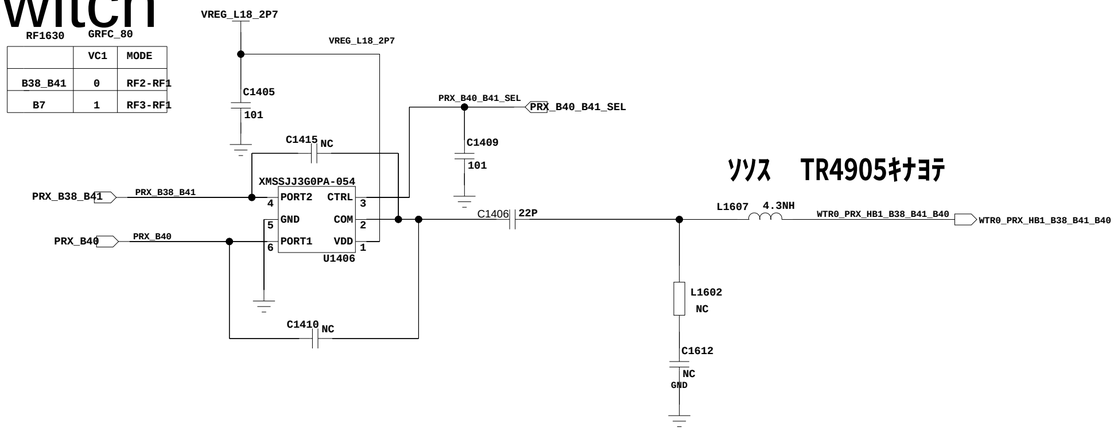

	VC1	MODE
B38_B41	0	RF2-RF1
B7	1	RF3-RF1

GPS

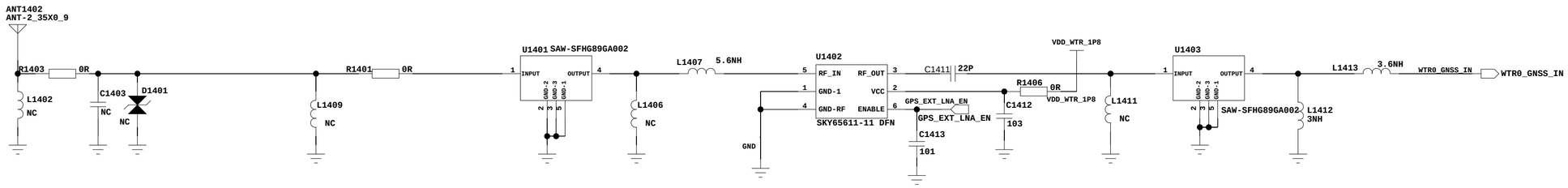

B20 TRX

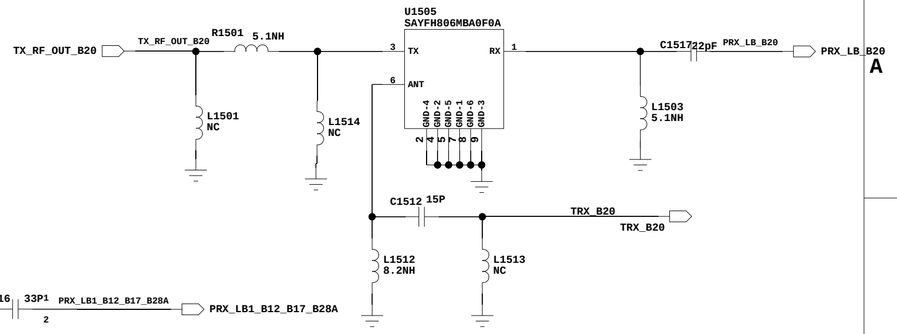

B4/B17/B20/B28 TRX

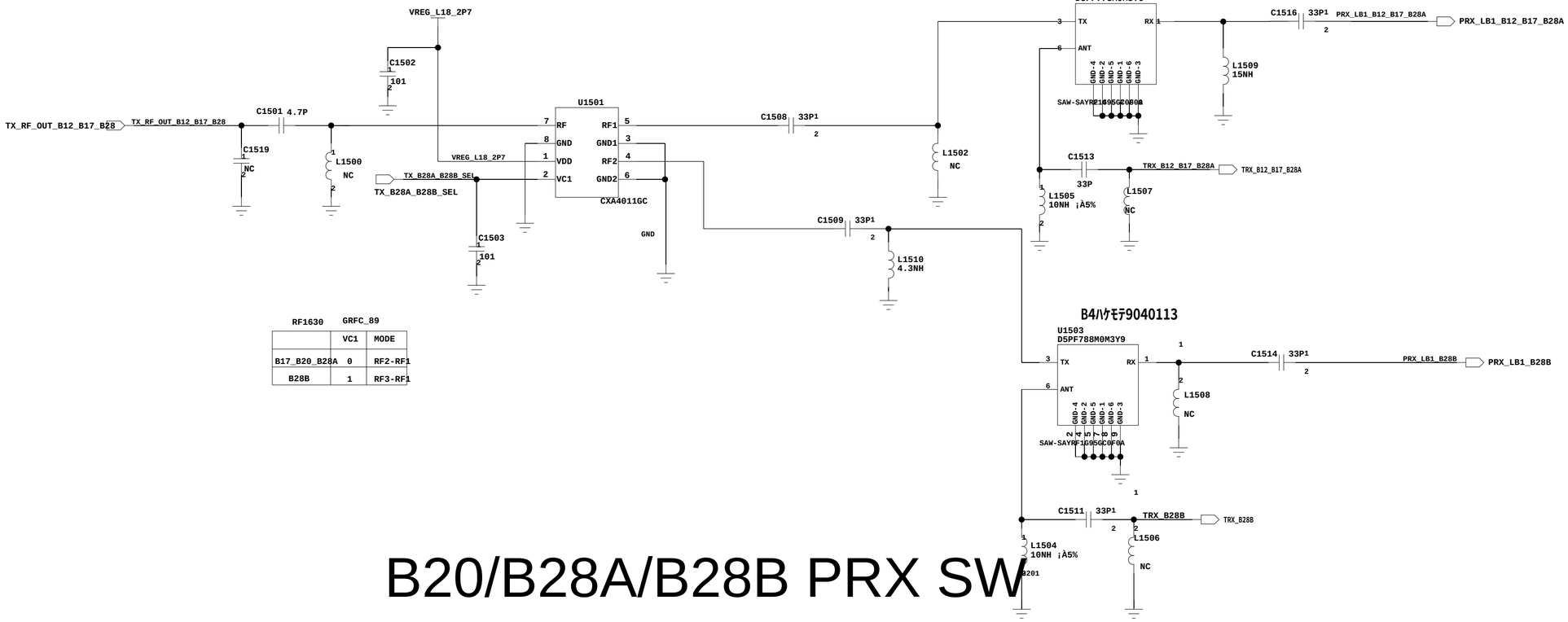

RF1630 GRFC_89

	VC1	MODE
B17_B20_B28A	0	RF2-RF1
B28B	1	RF3-RF1

B20/B28A/B28B PRX SW

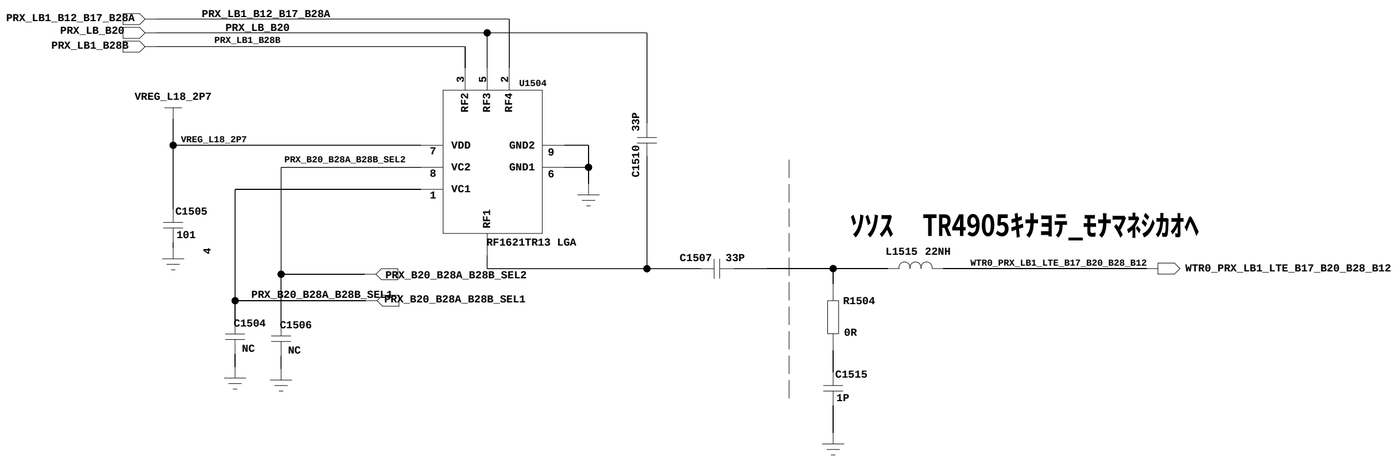

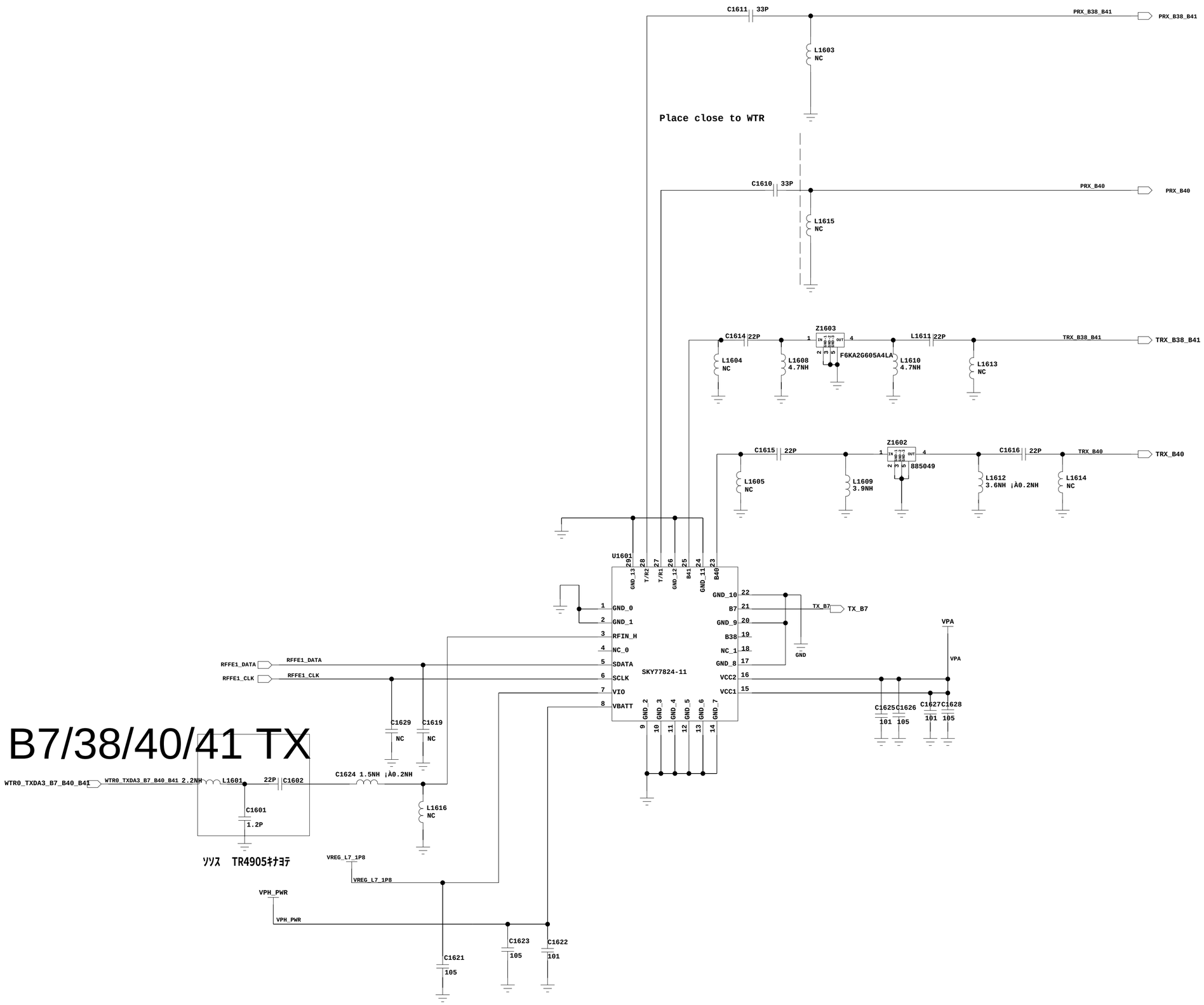
C1611 33P
PRX_B38_B41
PRX_B38_B41
L1603
NC
Place close to WTR
C1610 33P
PRX_B40
PRX_B40
L1615
NC
C1614 22P
Z1603
L1611 22P
TRX_B38_B41
TRX_B38_B41
L1604
NC
L1608
4.7NH
F6KA2G605A4LA
L1610
4.7NH
L1613
NC
C1615 22P
Z1602
C1616 22P
TRX_B40
TRX_B40
L1605
NC
L1609
3.9NH
885049
L1612
3.6NH ¡À0.2NH
L1614
NC
U1601
GND_13
T/R2
T/R1
GND_12
B41
GND_11
B40
GND_0
GND_1
RFIN_H
NC_0
SDATA
SCLK
VIO
VBATT
GND_10
B7
GND_9
B38
NC_1
GND_8
VCC2
VCC1
GND_2
GND_3
GND_4
GND_5
GND_6
GND_7
SKY77824-11
TX_B7
TX_B7
GND
VPA
VPA
RFFE1_DATA
RFFE1_DATA
RFFE1_CLK
RFFE1_CLK
C1629
NC
C1619
NC
C1625
101
C1626
105
C1627
101
C1628
105
B7/38/40/41 TX
WTR0_TXDA3_B7_B40_B41
WTR0_TXDA3_B7_B40_B41 2.2NH
L1601
22P
C1602
C1624 1.5NH ¡À0.2NH
C1601
1.2P
L1616
NC
ｿﾝｽ TR4905ｷﾅﾖﾃ
VREG_L7_1P8
VREG_L7_1P8
VPH_PWR
VPH_PWR
C1621
105
C1623
105
C1622
101

DRX B39 & B3 Switch

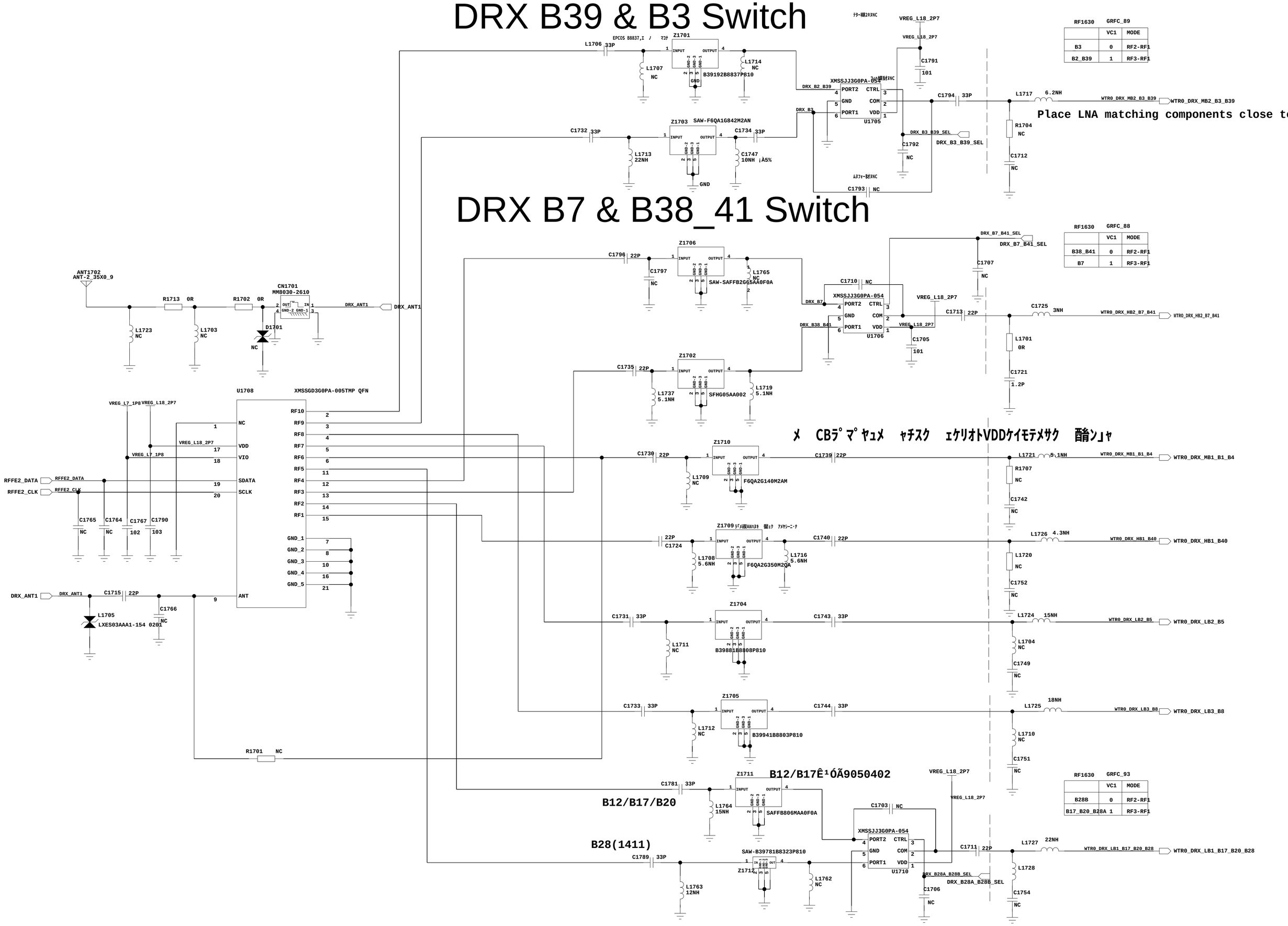

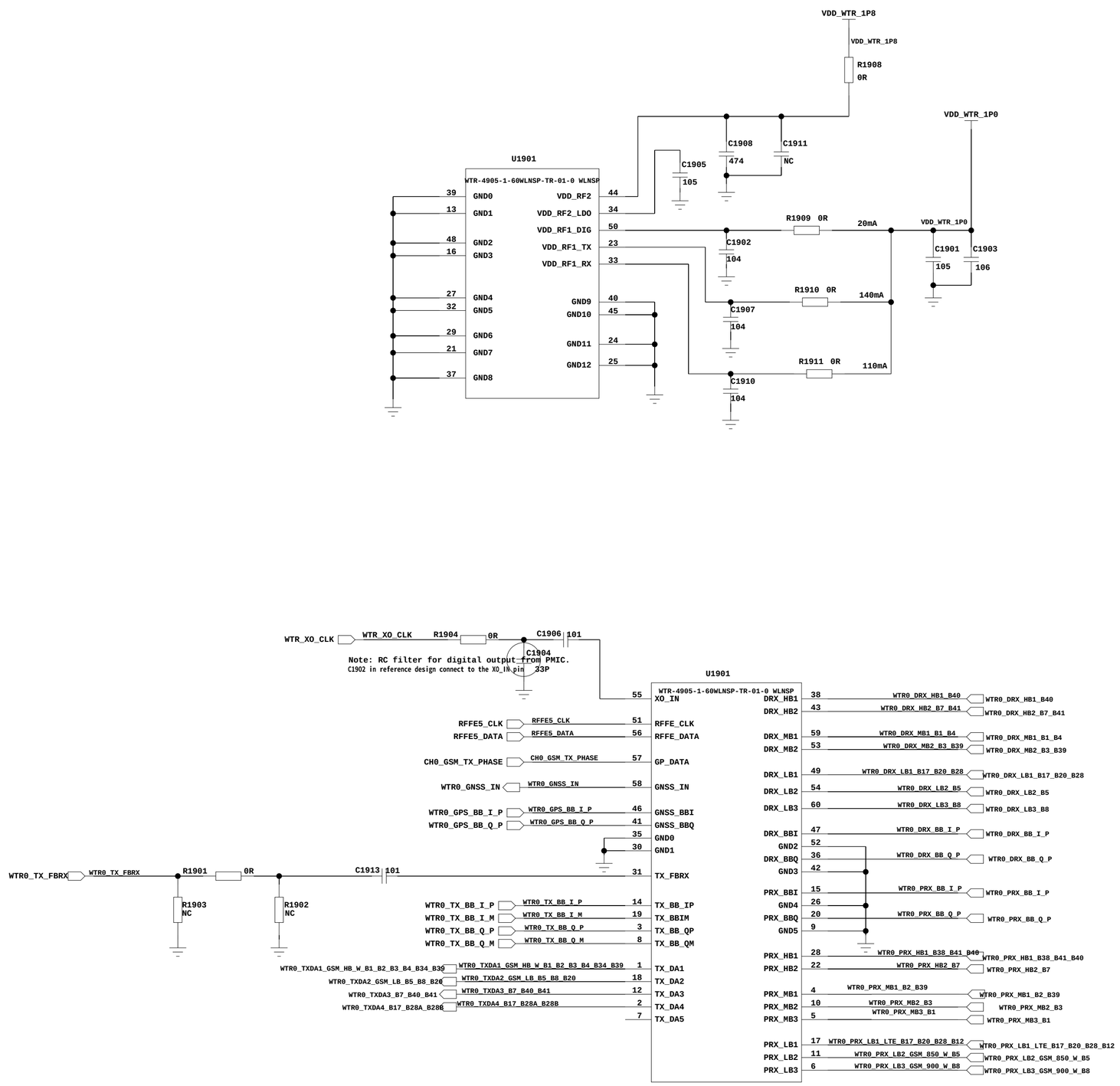
VDD_WTR_1P8
VDD_WTR_1P8
R1908
0R
VDD_WTR_1P0
C1908
474
C1911
NC
C1905
105
U1901
WTR-4905-1-60WLNSP-TR-01-0 WLNSP
39 GND0
13 GND1
48 GND2
16 GND3
27 GND4
32 GND5
29 GND6
21 GND7
37 GND8
VDD_RF2 44
VDD_RF2_LDO 34
VDD_RF1_DIG 50
VDD_RF1_TX 23
VDD_RF1_RX 33
GND9 40
GND10 45
GND11 24
GND12 25
R1909 0R
20mA
VDD_WTR_1P0
C1902
104
C1901
105
C1903
106
R1910 0R
140mA
C1907
104
R1911 0R
110mA
C1910
104
WTR_XO_CLK
WTR_XO_CLK
R1904
0R
C1906
101
C1904
33P
Note: RC filter for digital output from PMIC.
C1902 in reference design connect to the XO_IN pin
U1901
WTR-4905-1-60WLNSP-TR-01-0 WLNSP
55 XO_IN
RFFE5_CLK
RFFE5_CLK 51 RFFE_CLK
RFFE5_DATA
RFFE5_DATA 56 RFFE_DATA
CH0_GSM_TX_PHASE
CH0_GSM_TX_PHASE 57 GP_DATA
WTR0_GNSS_IN
WTR0_GNSS_IN 58 GNSS_IN
WTR0_GPS_BB_I_P
WTR0_GPS_BB_I_P 46 GNSS_BBI
WTR0_GPS_BB_Q_P
WTR0_GPS_BB_Q_P 41 GNSS_BBQ
35 GND0
30 GND1
WTR0_TX_FBRX
WTR0_TX_FBRX
R1901
0R
C1913
101
31 TX_FBRX
R1903
NC
R1902
NC
WTR0_TX_BB_I_P
WTR0_TX_BB_I_P 14 TX_BB_IP
WTR0_TX_BB_I_M
WTR0_TX_BB_I_M 19 TX_BBIM
WTR0_TX_BB_Q_P
WTR0_TX_BB_Q_P 3 TX_BB_QP
WTR0_TX_BB_Q_M
WTR0_TX_BB_Q_M 8 TX_BB_QM
WTR0_TXDA1_GSM_HB_W_B1_B2_B3_B4_B34_B39
WTR0_TXDA1_GSM_HB_W_B1_B2_B3_B4_B34_B39 1 TX_DA1
WTR0_TXDA2_GSM_LB_B5_B8_B20
WTR0_TXDA2_GSM_LB_B5_B8_B20 18 TX_DA2
WTR0_TXDA3_B7_B40_B41
WTR0_TXDA3_B7_B40_B41 12 TX_DA3
WTR0_TXDA4_B17_B28A_B28B
WTR0_TXDA4_B17_B28A_B28B 2 TX_DA4
7 TX_DA5
38 DRX_HB1 WTR0_DRX_HB1_B40 WTR0_DRX_HB1_B40
43 DRX_HB2 WTR0_DRX_HB2_B7_B41 WTR0_DRX_HB2_B7_B41
59 DRX_MB1 WTR0_DRX_MB1_B1_B4 WTR0_DRX_MB1_B1_B4
53 DRX_MB2 WTR0_DRX_MB2_B3_B39 WTR0_DRX_MB2_B3_B39
49 DRX_LB1 WTR0_DRX_LB1_B17_B20_B28 WTR0_DRX_LB1_B17_B20_B28
54 DRX_LB2 WTR0_DRX_LB2_B5 WTR0_DRX_LB2_B5
60 DRX_LB3 WTR0_DRX_LB3_B8 WTR0_DRX_LB3_B8
47 DRX_BBI WTR0_DRX_BB_I_P WTR0_DRX_BB_I_P
52 GND2
36 DRX_BBQ WTR0_DRX_BB_Q_P WTR0_DRX_BB_Q_P
42 GND3
15 PRX_BBI WTR0_PRX_BB_I_P WTR0_PRX_BB_I_P
26 GND4
20 PRX_BBQ WTR0_PRX_BB_Q_P WTR0_PRX_BB_Q_P
9 GND5
28 PRX_HB1 WTR0_PRX_HB1_B38_B41_B40 WTR0_PRX_HB1_B38_B41_B40
22 PRX_HB2 WTR0_PRX_HB2_B7 WTR0_PRX_HB2_B7
4 PRX_MB1 WTR0_PRX_MB1_B2_B39 WTR0_PRX_MB1_B2_B39
10 PRX_MB2 WTR0_PRX_MB2_B3 WTR0_PRX_MB2_B3
5 PRX_MB3 WTR0_PRX_MB3_B1 WTR0_PRX_MB3_B1
17 PRX_LB1 WTR0_PRX_LB1_LTE_B17_B20_B28_B12 WTR0_PRX_LB1_LTE_B17_B20_B28_B12
11 PRX_LB2 WTR0_PRX_LB2_GSM_850_W_B5 WTR0_PRX_LB2_GSM_850_W_B5
6 PRX_LB3 WTR0_PRX_LB3_GSM_900_W_B8 WTR0_PRX_LB3_GSM_900_W_B8

GPS+WIFI+BT

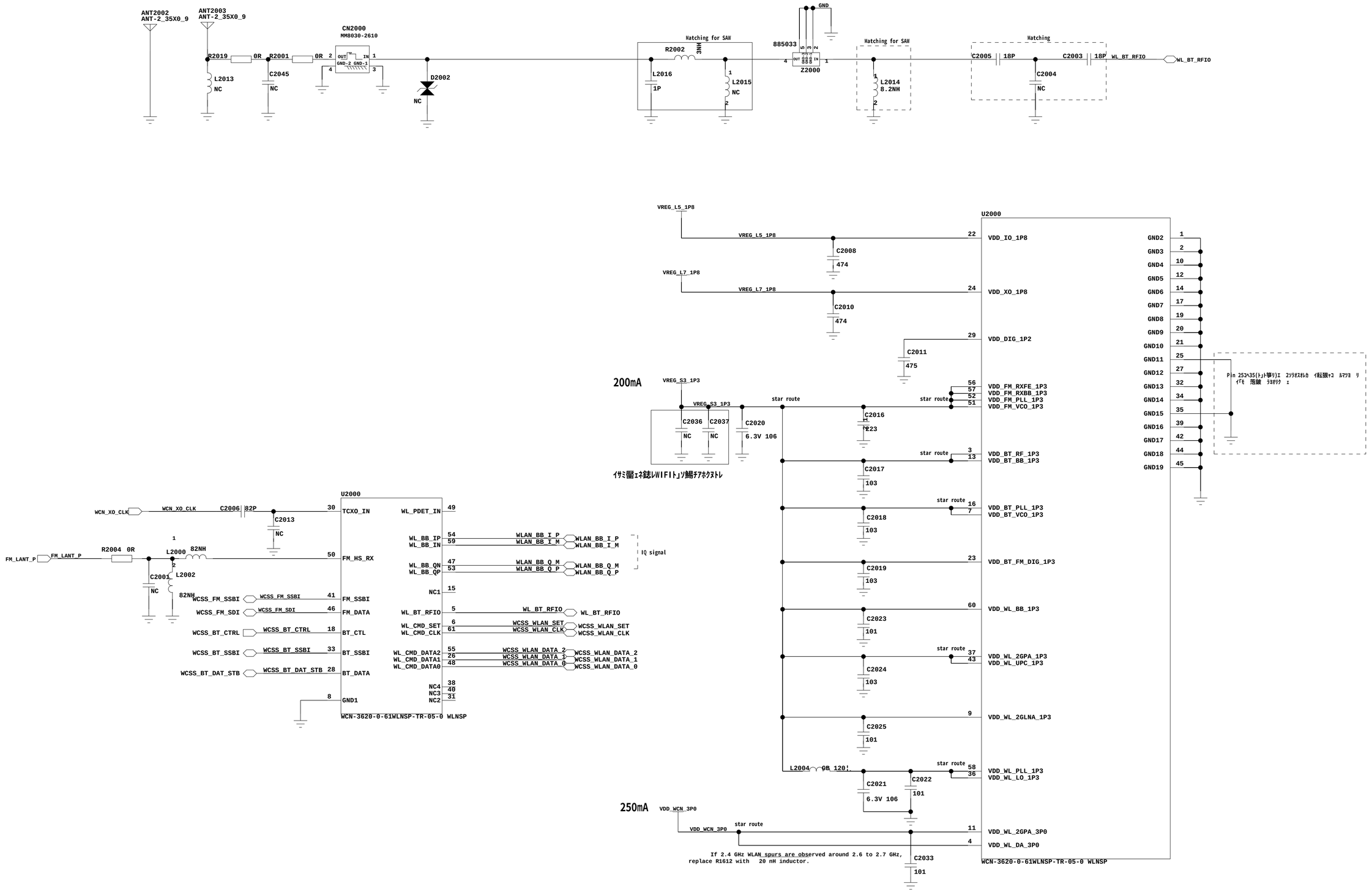
ANT2002
ANT-2_35X0_9
ANT2003
ANT-2_35X0_9
R2019
0R
R2001
0R
L2013
NC
C2045
NC
CN2000
MM8030-2610
OUT
IN
GND-2 GND-1
D2002
NC
Watching for SAW
R2002
3NH
L2016
1P
L2015
NC
885033
GND
Z2000
Watching for SAW
L2014
8.2NH
Watching
C2005
18P
C2003
18P
C2004
NC
WL_BT_RFIO
WL_BT_RFIO
VREG_L5_1P8
C2008
474
VREG_L7_1P8
C2010
474
U2000
VDD_IO_1P8
VDD_XO_1P8
VDD_DIG_1P2
C2011
475
200mA
VREG_S3_1P3
C2036
NC
C2037
NC
C2020
6.3V 106
star route
VDD_FM_RXFE_1P3
VDD_FM_RXBB_1P3
VDD_FM_PLL_1P3
VDD_FM_VCO_1P3
C2016
223
VDD_BT_RF_1P3
VDD_BT_BB_1P3
C2017
103
VDD_BT_PLL_1P3
VDD_BT_VCO_1P3
C2018
103
VDD_BT_FM_DIG_1P3
C2019
103
VDD_WL_BB_1P3
C2023
101
VDD_WL_2GPA_1P3
VDD_WL_UPC_1P3
C2024
103
VDD_WL_2GLNA_1P3
C2025
101
L2004
0R 120!.
C2021
6.3V 106
C2022
101
VDD_WL_PLL_1P3
VDD_WL_LO_1P3
250mA
VDD_WCN_3P0
VDD_WL_2GPA_3P0
VDD_WL_DA_3P0
C2033
101
WCN-3620-0-61WLNSP-TR-05-0 WLNSP
GND2
GND3
GND4
GND5
GND6
GND7
GND8
GND9
GND10
GND11
GND12
GND13
GND14
GND15
GND16
GND17
GND18
GND19
WCN_XO_CLK
C2006
82P
C2013
NC
FM_LANT_P
R2004 0R
L2000
82NH
C2001
NC
L2002
82NH
WCSS_FM_SSBI
WCSS_FM_SDI
WCSS_BT_CTRL
WCSS_BT_SSBI
WCSS_BT_DAT_STB
TCXO_IN
FM_HS_RX
FM_SSBI
FM_DATA
BT_CTL
BT_SSBI
BT_DATA
GND1
WL_PDET_IN
WL_BB_IP
WL_BB_IN
WL_BB_QN
WL_BB_QP
NC1
WL_BT_RFIO
WL_CMD_SET
WL_CMD_CLK
WL_CMD_DATA2
WL_CMD_DATA1
WL_CMD_DATA0
NC4
NC3
NC2
WLAN_BB_I_P
WLAN_BB_I_M
WLAN_BB_Q_M
WLAN_BB_Q_P
IQ signal
WCSS_WLAN_SET
WCSS_WLAN_CLK
WCSS_WLAN_DATA_2
WCSS_WLAN_DATA_1
WCSS_WLAN_DATA_0
WCN-3620-0-61WLNSP-TR-05-0 WLNSP
If 2.4 GHz WLAN spurs are observed around 2.6 to 2.7 GHz,
replace R1612 with 20 nH inductor.

Circuit of Ext. Charge

PM8916 CHARGING

Pins	Hi Z	GND
OPT_1	No SMB1360	SMB1360 present
OPT_2	No Ext APC buck (S5)	Ext APC buck (S5) present

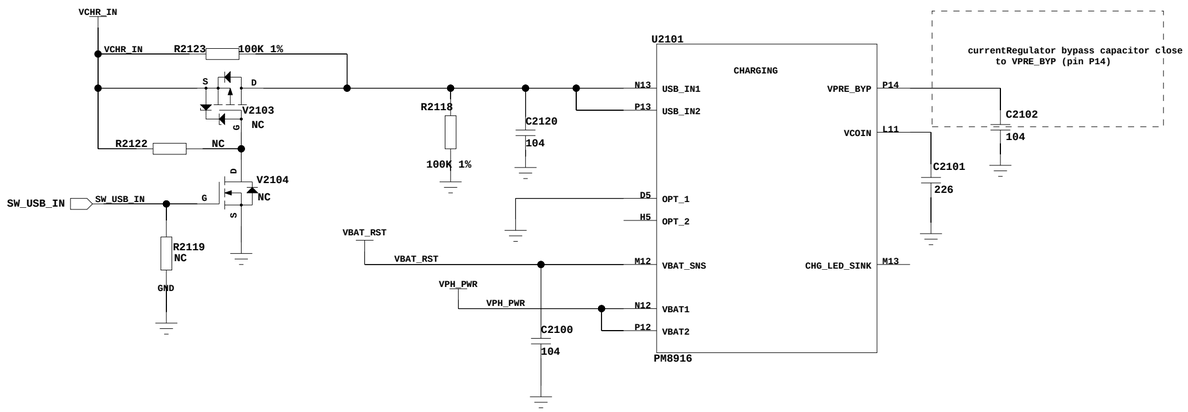

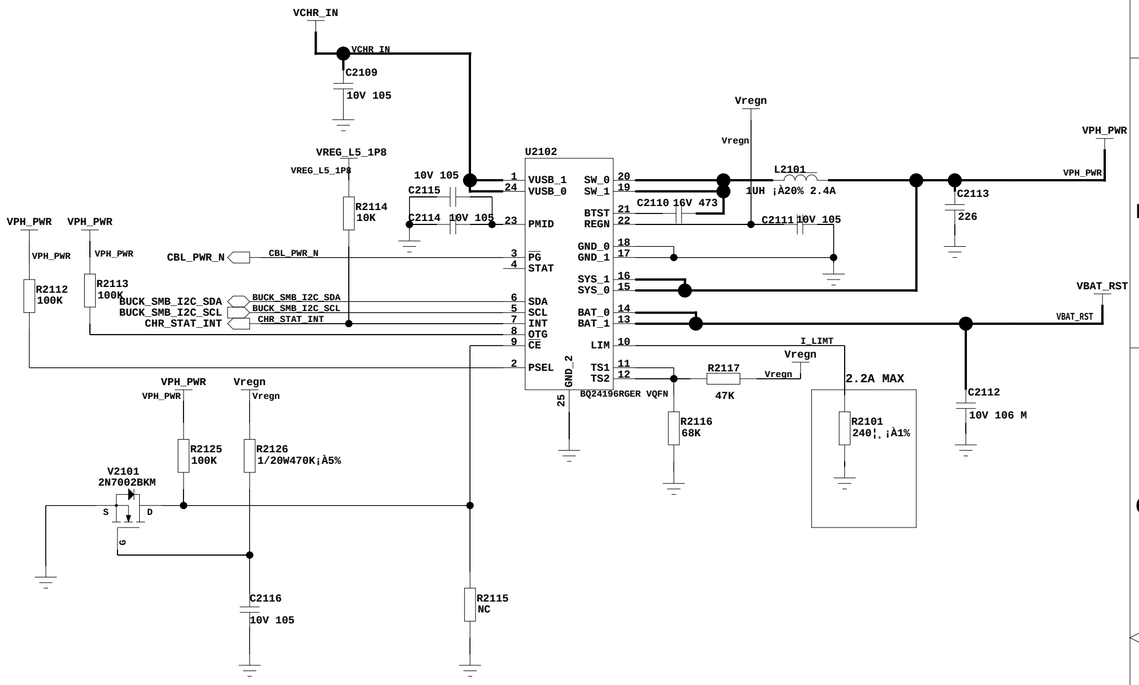

GPIO&MPP

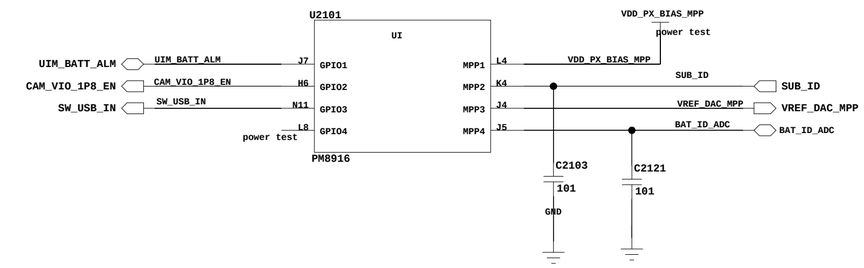

BATT CONNECTOR

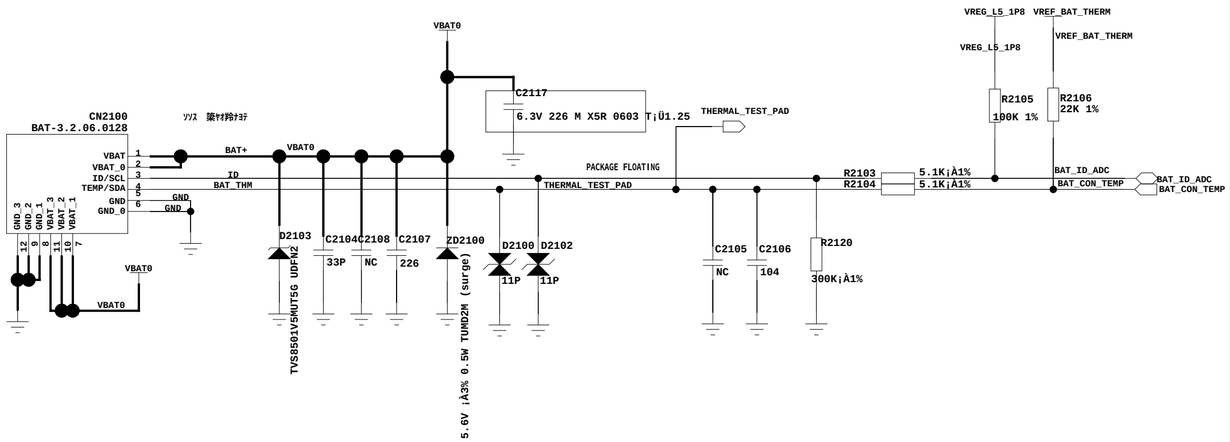

PM8916 GND

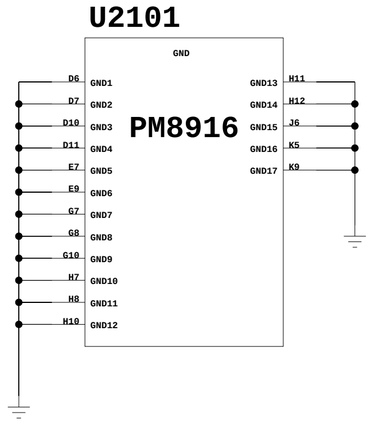

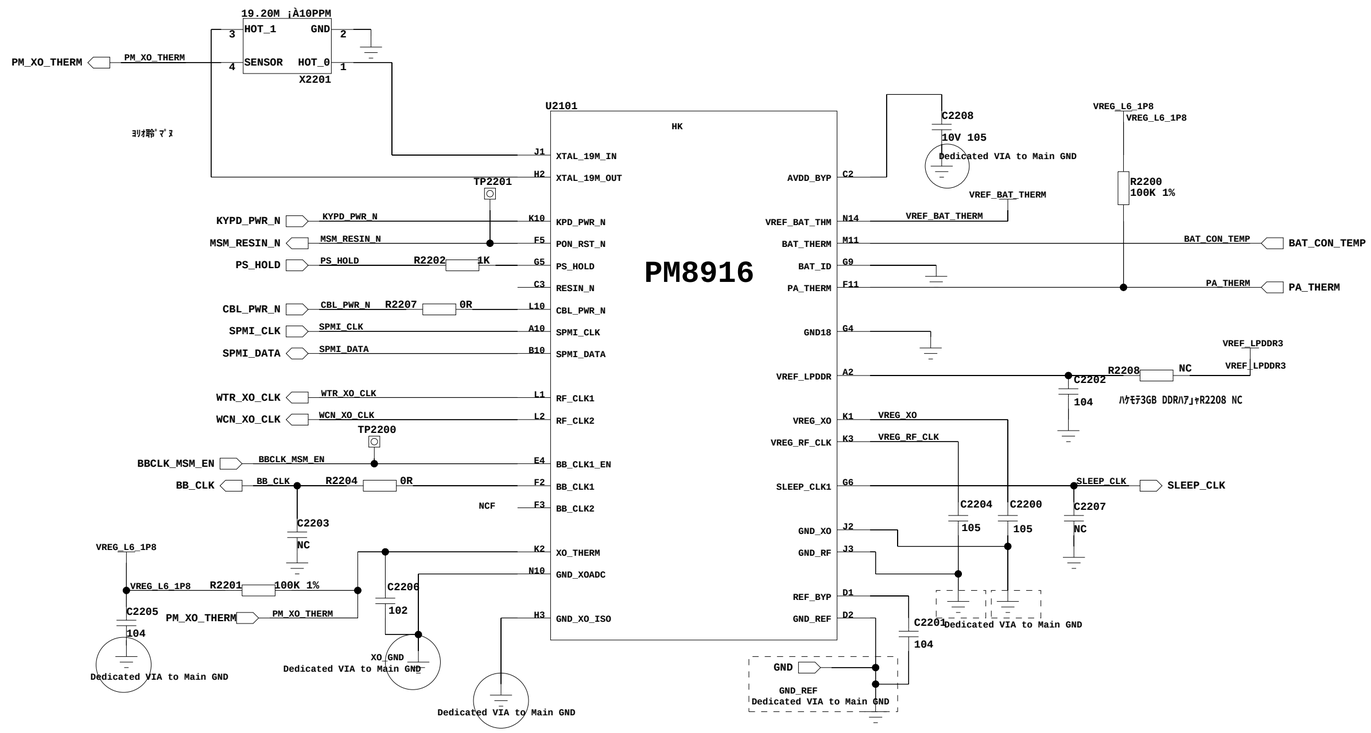
19.20M ¡À10PPM
HOT_1
GND
SENSOR
HOT_0
X2201
PM_XO_THERM
U2101
HK
PM8916
XTAL_19M_IN
XTAL_19M_OUT
TP2201
KYPD_PWR_N
MSM_RESIN_N
PS_HOLD
R2202
1K
RESIN_N
CBL_PWR_N
R2207
0R
SPMI_CLK
SPMI_DATA
WTR_XO_CLK
WCN_XO_CLK
TP2200
BBCLK_MSM_EN
BB_CLK
R2204
NCF
C2203
NC
VREG_L6_1P8
R2201
100K 1%
C2205
104
C2206
102
XO_GND
Dedicated VIA to Main GND
C2208
10V 105
Dedicated VIA to Main GND
VREF_BAT_THERM
R2200
100K 1%
BAT_CON_TEMP
PA_THERM
VREF_LPDDR3
R2208
C2202
104
ハケモ3GB DDRハ了ャR2208 NC
VREG_XO
VREG_RF_CLK
SLEEP_CLK
C2204
105
C2200
105
C2207
NC
C2201
104
GND
GND_REF

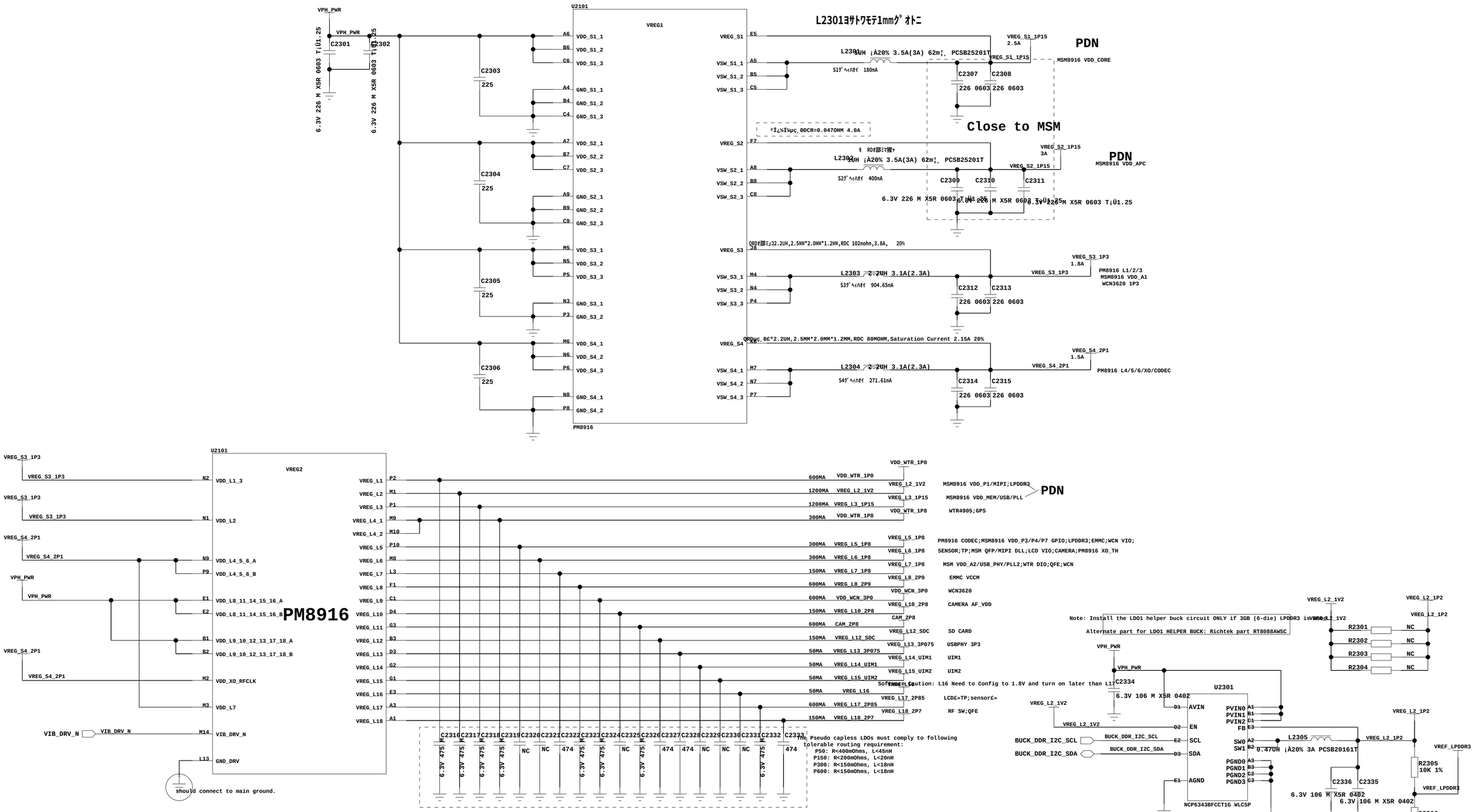
U2101
VREG1
PM8916
VPH_PWR
C2301
C2302
6.3V 226 M X5R 0603 T¡Ú1.25
C2303
C2304
C2305
C2306
225
VDD_S1_1
VDD_S1_2
VDD_S1_3
GND_S1_1
GND_S1_2
GND_S1_3
VDD_S2_1
VDD_S2_2
VDD_S2_3
GND_S2_1
GND_S2_2
GND_S2_3
VDD_S3_1
VDD_S3_2
VDD_S3_3
GND_S3_1
GND_S3_2
VDD_S4_1
VDD_S4_2
VDD_S4_3
GND_S4_1
GND_S4_2
VREG_S1
VSW_S1_1
VSW_S1_2
VSW_S1_3
VREG_S2
VSW_S2_1
VSW_S2_2
VSW_S2_3
VREG_S3
VSW_S3_1
VSW_S3_2
VSW_S3_3
VREG_S4
VSW_S4_1
VSW_S4_2
VSW_S4_3
L2301ÈÝÄÜÄ¿ÄÞ 1mmÄ¿ÄÞ ÄÞÄ¿ÄÞ
L2301 4UH ¡À20% 3.5A(3A) 62m¦¸ PCSB25201T
S1ÄÞ¿ÄÞÄ¿ 180mA
VREG_S1_1P15
2.5A
PDN
MSM8916 VDD_CORE
C2307
C2308
226 0603 226 0603
Close to MSM
*Ï¿½Ï¼µ, DDCR=0.0470HM 4.0A
VREG_S2_1P15
3A
PDN
MSM8916 VDD_APC
L2302 4UH ¡À20% 3.5A(3A) 62m¦¸ PCSB25201T
S2ÄÞ¿ÄÞÄ¿ 400mA
C2309
C2310
C2311
6.3V 226 M X5R 0603 T¡Ú1.25
QRDÄ¿ÄÞ¿ÄÞ:2.2UH,2.5MM*2.0MM*1.2MM,RDC 102mohm,3.8A, 20%
VREG_S3_1P3
1.8A
PM8916 L1/2/3
MSM8916 VDD_A1
WCN3620 1P3
L2303 2.2UH 3.1A(2.3A)
S3ÄÞ¿ÄÞÄ¿ 904.65mA
C2312
C2313
226 0603 226 0603
QRDÄ¿ÄÞ¿ÄÞ:2.2UH,2.5MM*2.0MM*1.2MM,RDC 80MOHM,Saturation Current 2.15A 20%
VREG_S4_2P1
1.5A
PM8916 L4/5/6/XO/CODEC
L2304 2.2UH 3.1A(2.3A)
S4ÄÞ¿ÄÞÄ¿ 271.61mA
C2314
C2315
226 0603 226 0603
U2101
VREG2
PM8916
VREG_S3_1P3
VREG_S4_2P1
VPH_PWR
VIB_DRV_N
VDD_L1_3
VDD_L2
VDD_L4_5_6_A
VDD_L4_5_6_B
VDD_L8_11_14_15_16_A
VDD_L8_11_14_15_16_B
VDD_L9_10_12_13_17_18_A
VDD_L9_10_12_13_17_18_B
VDD_XO_RFCLK
VDD_L7
VIB_DRV_N
GND_DRV
should connect to main ground.
VREG_L1
VREG_L2
VREG_L3
VREG_L4_1
VREG_L4_2
VREG_L5
VREG_L6
VREG_L7
VREG_L8
VREG_L9
VREG_L10
VREG_L11
VREG_L12
VREG_L13
VREG_L14
VREG_L15
VREG_L16
VREG_L17
VREG_L18
600MA VDD_WTR_1P0
1200MA VREG_L2_1V2
1200MA VREG_L3_1P15
300MA VDD_WTR_1P8
300MA VREG_L5_1P8
300MA VREG_L6_1P8
150MA VREG_L7_1P8
600MA VREG_L8_2P9
600MA VDD_WCN_3P0
150MA VREG_L10_2P8
600MA CAM_2P8
150MA VREG_L12_SDC
50MA VREG_L13_3P075
50MA VREG_L14_UIM1
50MA VREG_L15_UIM2
50MA VREG_L16
600MA VREG_L17_2P85
150MA VREG_L18_2P7
VDD_WTR_1P0
VREG_L2_1V2
VREG_L3_1P15
VDD_WTR_1P8
MSM8916 VDD_P1/MIPI;LPDDR3
MSM8916 VDD_MEM/USB/PLL
PDN
WTR4905;GPS
VREG_L5_1P8
VREG_L6_1P8
VREG_L7_1P8
VREG_L8_2P9
VDD_WCN_3P0
VREG_L10_2P8
CAM_2P8
VREG_L12_SDC
VREG_L13_3P075
VREG_L14_UIM1
VREG_L15_UIM2
VREG_L16
VREG_L17_2P85
VREG_L18_2P7
PM8916 CODEC;MSM8916 VDD_P3/P4/P7 GPIO;LPDDR3;EMMC;WCN VIO;
SENSOR;TP;MSM QFP/MIPI DLL;LCD VIO;CAMERA;PM8916 XO_TH
MSM VDD_A2/USB_PHY/PLL2;WTR DIO;QFE;WCN
EMMC VCCM
WCN3620
CAMERA AF_VDD
SD CARD
USBPHY 3P3
UIM1
UIM2
LCD£»TP;sensor£»
RF SW;QFE
C2316 C2317 C2318 C2319 C2320 C2321 C2322 C2323 C2324 C2325 C2326 C2327 C2328 C2329 C2330 C2331 C2332 C2333
6.3V 475
NC
474
The Pseudo capless LDOs must comply to following
tolerable routing requirement:
P50: R<400mOhms, L<45nH
P150: R<200mOhms, L<20nH
P300: R<150mOhms, L<18nH
P600: R<150mOhms, L<18nH
Note: Install the LDO1 helper buck circuit ONLY if 3GB (6-die) LPDDR3 is used
Alternate part for LDO1 HELPER BUCK: Richtek part RT8088AWSC
Software Caution: L16 Need to Config to 1.8V and turn on later than L17
VREG_L2_1V2
VREG_L2_1P2
R2301
R2302
R2303
R2304
NC
C2334
6.3V 106 M X5R 0402
U2301
AVIN
EN
SCL
SDA
AGND
PVIN0
PVIN1
PVIN2
FB
SW0
SW1
PGND0
PGND1
PGND2
PGND3
NCP6343BFCCT1G WLCSP
BUCK_DDR_I2C_SCL
BUCK_DDR_I2C_SDA
L2305
0.47UH ¡À20% 3A PCSB20161T
C2336
C2335
6.3V 106 M X5R 0402
VREF_LPDDR3
R2305
10K 1%
R2306
10K 1%

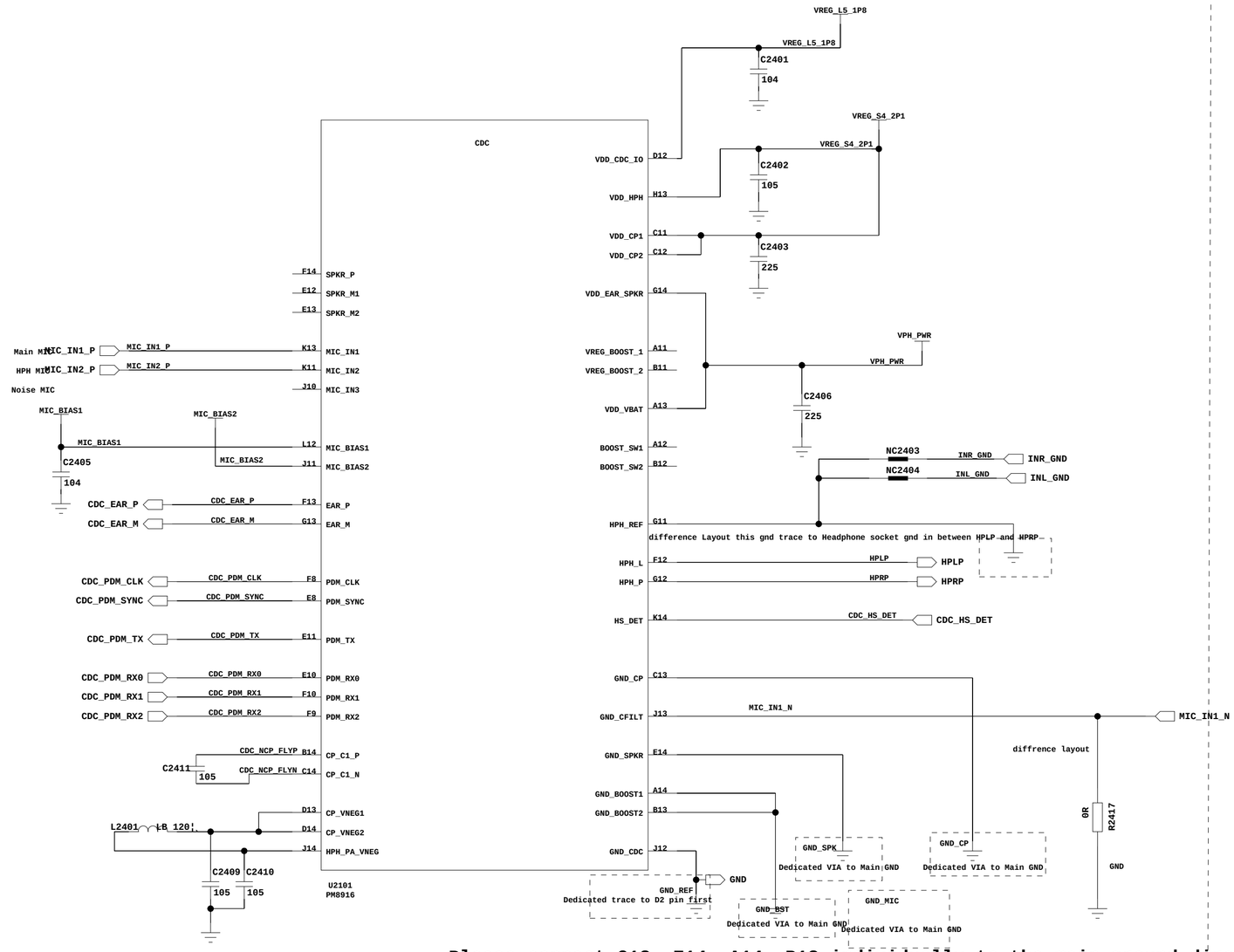

Please connect C13, E14, A14, B13 individually to the main ground directly

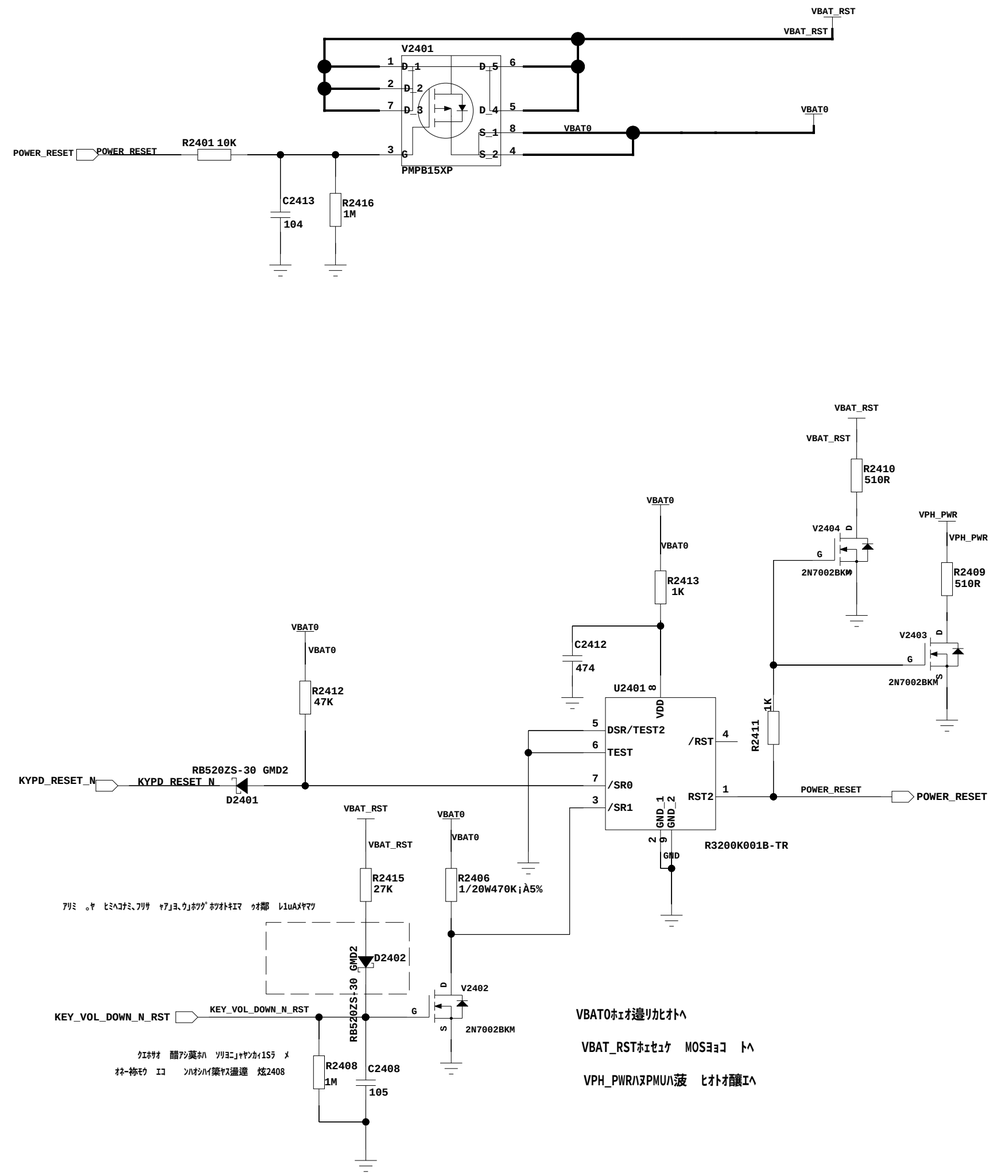

ﾗﾟﾏﾟハアメサカｨメｪﾗﾟウノイ鋒ヨマﾟミホハス

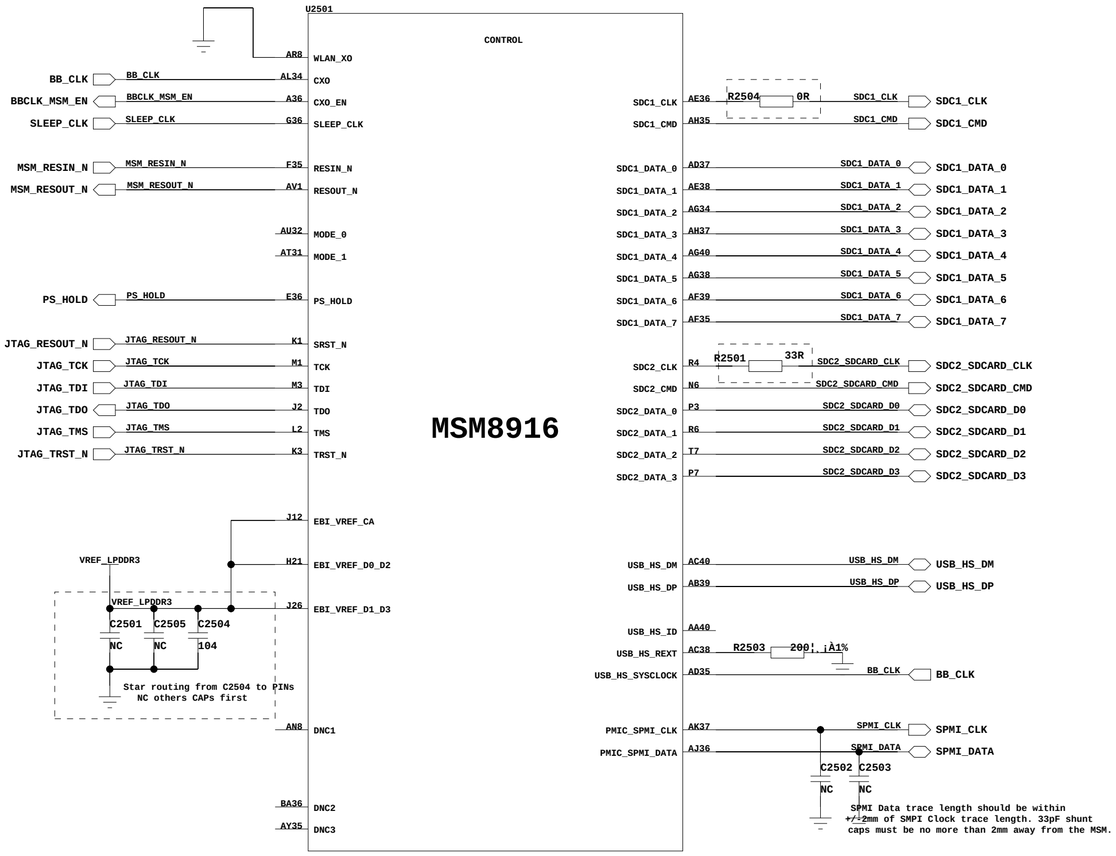
U2501
CONTROL
MSM8916
BB_CLK
BBCLK_MSM_EN
SLEEP_CLK
MSM_RESIN_N
MSM_RESOUT_N
PS_HOLD
JTAG_RESOUT_N
JTAG_TCK
JTAG_TDI
JTAG_TDO
JTAG_TMS
JTAG_TRST_N
WLAN_XO
CXO
CXO_EN
SLEEP_CLK
RESIN_N
RESOUT_N
MODE_0
MODE_1
PS_HOLD
SRST_N
TCK
TDI
TDO
TMS
TRST_N
EBI_VREF_CA
EBI_VREF_D0_D2
EBI_VREF_D1_D3
DNC1
DNC2
DNC3
VREF_LPDDR3
C2501 C2505 C2504
NC NC 104
Star routing from C2504 to PINs
NC others CAPs first
R2504 0R
SDC1_CLK
SDC1_CMD
SDC1_DATA_0
SDC1_DATA_1
SDC1_DATA_2
SDC1_DATA_3
SDC1_DATA_4
SDC1_DATA_5
SDC1_DATA_6
SDC1_DATA_7
R2501 33R
SDC2_CLK
SDC2_CMD
SDC2_SDCARD_CLK
SDC2_SDCARD_CMD
SDC2_SDCARD_D0
SDC2_SDCARD_D1
SDC2_SDCARD_D2
SDC2_SDCARD_D3
USB_HS_DM
USB_HS_DP
USB_HS_ID
USB_HS_REXT
USB_HS_SYSCLOCK
R2503 200¦ ¡À1%
BB_CLK
PMIC_SPMI_CLK
PMIC_SPMI_DATA
SPMI_CLK
SPMI_DATA
C2502 C2503
NC NC
SPMI Data trace length should be within
+/-2mm of SMPI Clock trace length. 33pF shunt
caps must be no more than 2mm away from the MSM.

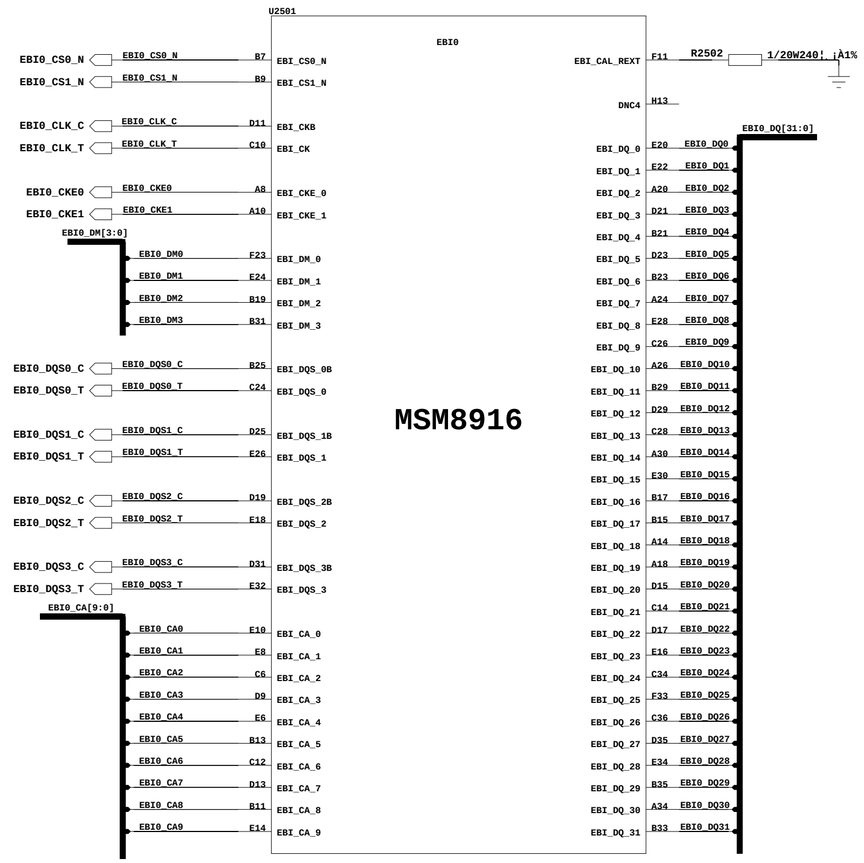
U2501
EBI0
MSM8916
EBI0_CS0_N
EBI0_CS1_N
EBI0_CLK_C
EBI0_CLK_T
EBI0_CKE0
EBI0_CKE1
EBI0_DM[3:0]
EBI0_DQS0_C
EBI0_DQS0_T
EBI0_DQS1_C
EBI0_DQS1_T
EBI0_DQS2_C
EBI0_DQS2_T
EBI0_DQS3_C
EBI0_DQS3_T
EBI0_CA[9:0]
EBI_CAL_REXT
R2502 1/20W240¦ ¡À1%
DNC4
EBI0_DQ[31:0]
EBI_CKB
EBI_CK
EBI_CKE_0
EBI_CKE_1
EBI_DM_0
EBI_DM_1
EBI_DM_2
EBI_DM_3
EBI_DQS_0B
EBI_DQS_0
EBI_DQS_1B
EBI_DQS_1
EBI_DQS_2B
EBI_DQS_2
EBI_DQS_3B
EBI_DQS_3
EBI_CA_0
EBI_CA_1
EBI_CA_2
EBI_CA_3
EBI_CA_4
EBI_CA_5
EBI_CA_6
EBI_CA_7
EBI_CA_8
EBI_CA_9

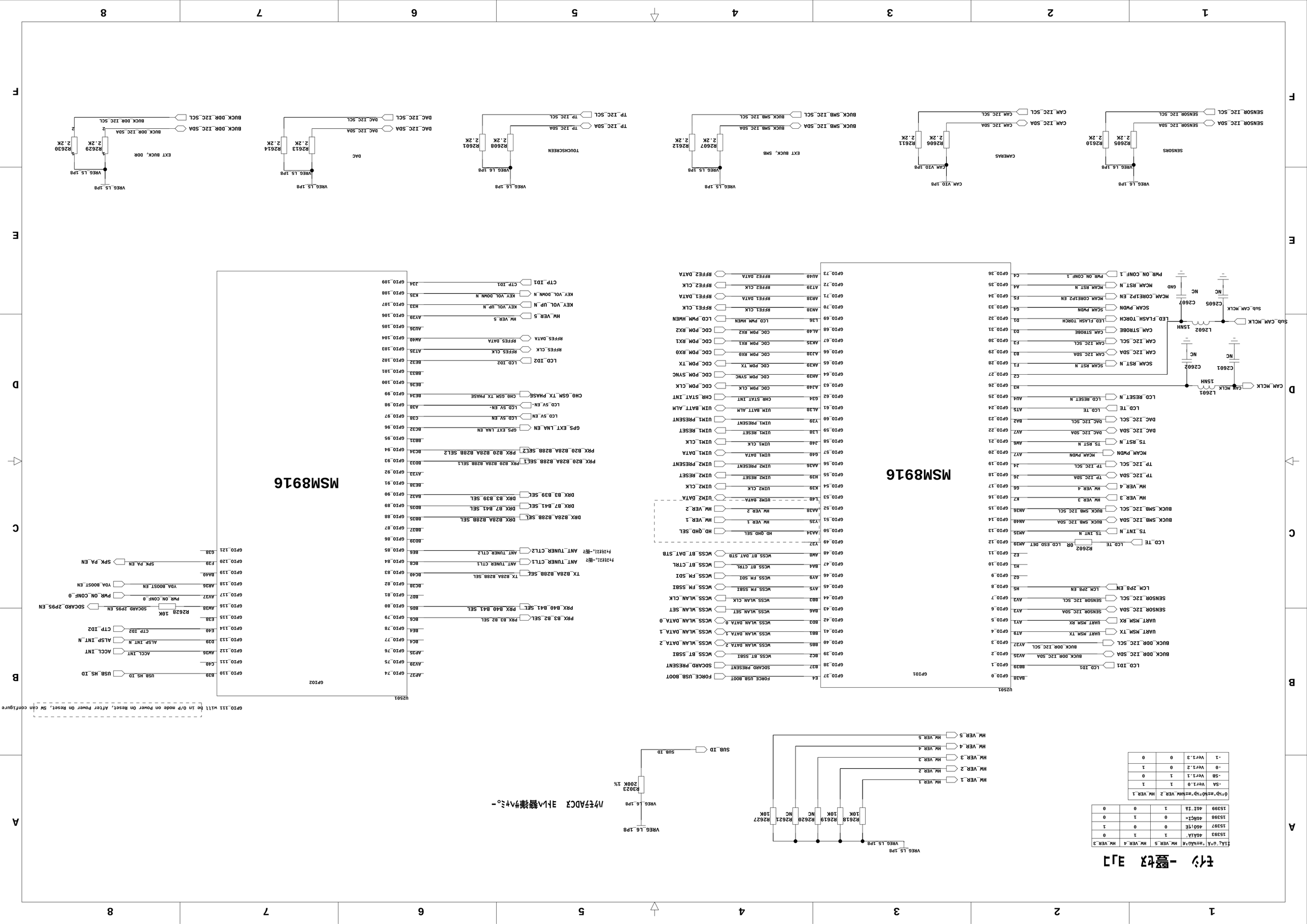
MSM8916
MSM8916
ドイツ ー覧ビス ヨ工
ハイパスADCス ヨトレン替準ゲイミ。ー
GPIO_111 will be in O/P mode on Power on Reset, After Power on Reset, SW can configure

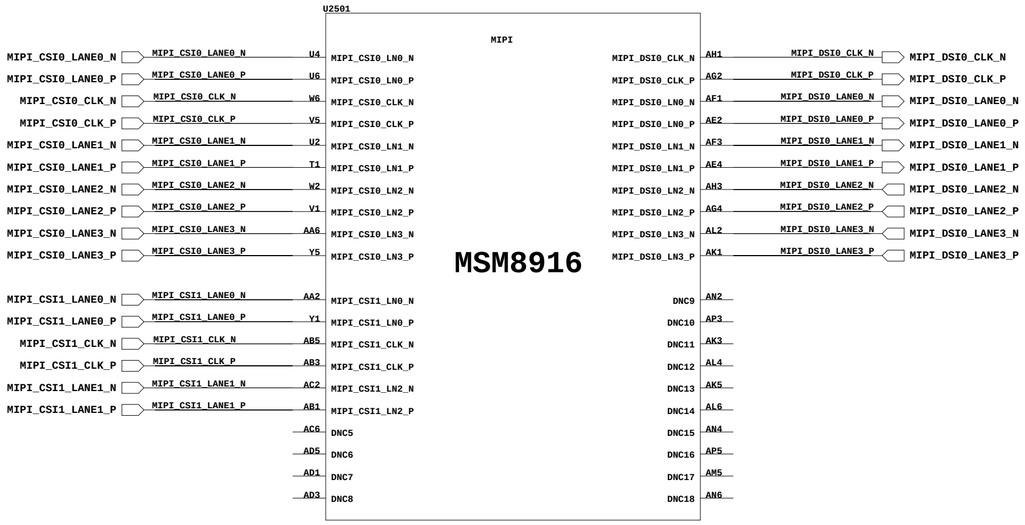
U2501
MIPI
MSM8916
MIPI_CSI0_LANE0_N
MIPI_CSI0_LANE0_P
MIPI_CSI0_CLK_N
MIPI_CSI0_CLK_P
MIPI_CSI0_LANE1_N
MIPI_CSI0_LANE1_P
MIPI_CSI0_LANE2_N
MIPI_CSI0_LANE2_P
MIPI_CSI0_LANE3_N
MIPI_CSI0_LANE3_P
MIPI_CSI1_LANE0_N
MIPI_CSI1_LANE0_P
MIPI_CSI1_CLK_N
MIPI_CSI1_CLK_P
MIPI_CSI1_LANE1_N
MIPI_CSI1_LANE1_P
U4
U6
W6
V5
U2
T1
W2
V1
AA6
Y5
AA2
Y1
AB5
AB3
AC2
AB1
AC6
AD5
AD1
AD3
MIPI_CSI0_LN0_N
MIPI_CSI0_LN0_P
MIPI_CSI0_CLK_N
MIPI_CSI0_CLK_P
MIPI_CSI0_LN1_N
MIPI_CSI0_LN1_P
MIPI_CSI0_LN2_N
MIPI_CSI0_LN2_P
MIPI_CSI0_LN3_N
MIPI_CSI0_LN3_P
MIPI_CSI1_LN0_N
MIPI_CSI1_LN0_P
MIPI_CSI1_CLK_N
MIPI_CSI1_CLK_P
MIPI_CSI1_LN2_N
MIPI_CSI1_LN2_P
DNC5
DNC6
DNC7
DNC8
MIPI_DSI0_CLK_N
MIPI_DSI0_CLK_P
MIPI_DSI0_LN0_N
MIPI_DSI0_LN0_P
MIPI_DSI0_LN1_N
MIPI_DSI0_LN1_P
MIPI_DSI0_LN2_N
MIPI_DSI0_LN2_P
MIPI_DSI0_LN3_N
MIPI_DSI0_LN3_P
DNC9
DNC10
DNC11
DNC12
DNC13
DNC14
DNC15
DNC16
DNC17
DNC18
AH1
AG2
AF1
AE2
AF3
AE4
AH3
AG4
AL2
AK1
AN2
AP3
AK3
AL4
AK5
AL6
AN4
AP5
AM5
AN6
MIPI_DSI0_LANE0_N
MIPI_DSI0_LANE0_P
MIPI_DSI0_LANE1_N
MIPI_DSI0_LANE1_P
MIPI_DSI0_LANE2_N
MIPI_DSI0_LANE2_P
MIPI_DSI0_LANE3_N
MIPI_DSI0_LANE3_P

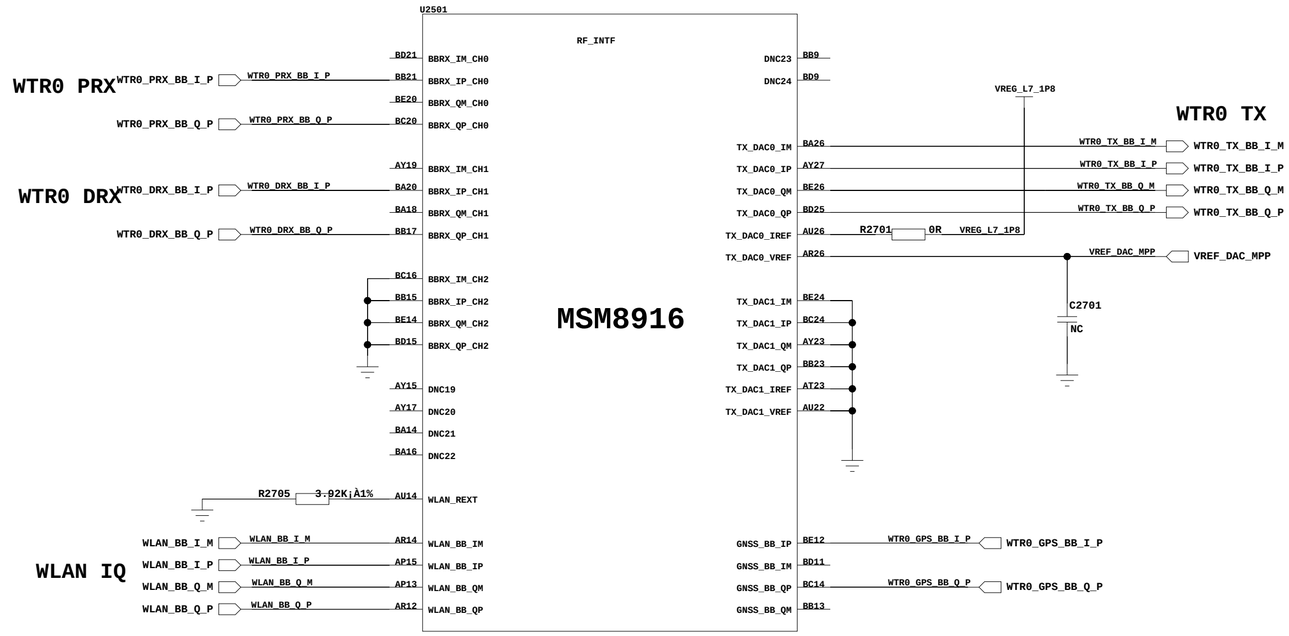
U2501
RF_INTF
MSM8916
WTR0 PRX
WTR0 DRX
WLAN IQ
WTR0 TX
WTR0_PRX_BB_I_P
WTR0_PRX_BB_Q_P
WTR0_DRX_BB_I_P
WTR0_DRX_BB_Q_P
BBRX_IM_CH0
BBRX_IP_CH0
BBRX_QM_CH0
BBRX_QP_CH0
BBRX_IM_CH1
BBRX_IP_CH1
BBRX_QM_CH1
BBRX_QP_CH1
BBRX_IM_CH2
BBRX_IP_CH2
BBRX_QM_CH2
BBRX_QP_CH2
DNC19
DNC20
DNC21
DNC22
R2705
3.92K¡À1%
WLAN_REXT
WLAN_BB_I_M
WLAN_BB_I_P
WLAN_BB_Q_M
WLAN_BB_Q_P
WLAN_BB_IM
WLAN_BB_IP
WLAN_BB_QM
WLAN_BB_QP
DNC23
DNC24
VREG_L7_1P8
TX_DAC0_IM
TX_DAC0_IP
TX_DAC0_QM
TX_DAC0_QP
TX_DAC0_IREF
TX_DAC0_VREF
R2701
0R
VREF_DAC_MPP
C2701
NC
TX_DAC1_IM
TX_DAC1_IP
TX_DAC1_QM
TX_DAC1_QP
TX_DAC1_IREF
TX_DAC1_VREF
GNSS_BB_IP
GNSS_BB_IM
GNSS_BB_QP
GNSS_BB_QM
WTR0_GPS_BB_I_P
WTR0_GPS_BB_Q_P

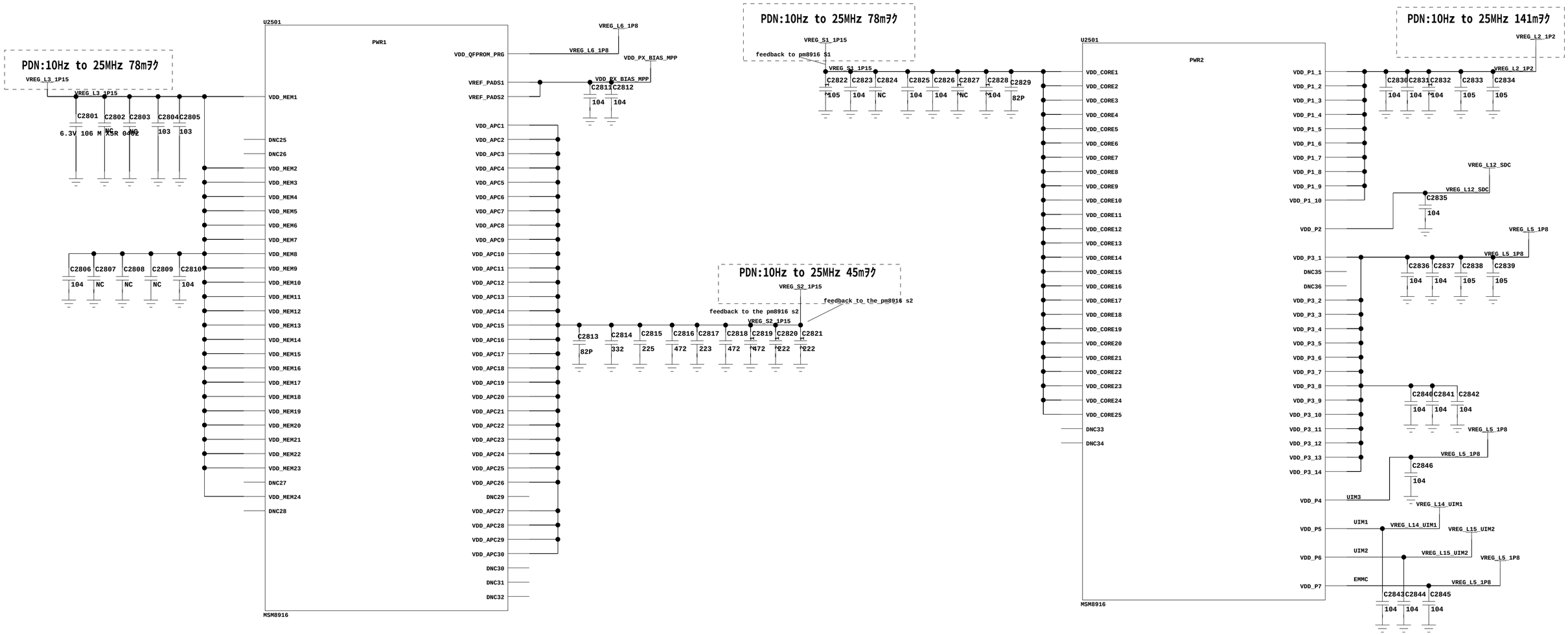
PDN:10Hz to 25MHz 78mヲ
VREG_L3_1P15
C2801 C2802 C2803 C2804 C2805
6.3V 106 M X5R 0402
103 103
C2806 C2807 C2808 C2809 C2810
104 NC NC NC 104
U2501
PWR1
MSM8916
VDD_MEM1
DNC25
DNC26
VDD_MEM2
VDD_MEM3
VDD_MEM4
VDD_MEM5
VDD_MEM6
VDD_MEM7
VDD_MEM8
VDD_MEM9
VDD_MEM10
VDD_MEM11
VDD_MEM12
VDD_MEM13
VDD_MEM14
VDD_MEM15
VDD_MEM16
VDD_MEM17
VDD_MEM18
VDD_MEM19
VDD_MEM20
VDD_MEM21
VDD_MEM22
VDD_MEM23
DNC27
VDD_MEM24
DNC28
VDD_QFPROM_PRG
VREF_PADS1
VREF_PADS2
VREG_L6_1P8
VDD_PX_BIAS_MPP
C2811 C2812
104 104
VDD_APC1
VDD_APC2
VDD_APC3
VDD_APC4
VDD_APC5
VDD_APC6
VDD_APC7
VDD_APC8
VDD_APC9
VDD_APC10
VDD_APC11
VDD_APC12
VDD_APC13
VDD_APC14
VDD_APC15
VDD_APC16
VDD_APC17
VDD_APC18
VDD_APC19
VDD_APC20
VDD_APC21
VDD_APC22
VDD_APC23
VDD_APC24
VDD_APC25
VDD_APC26
DNC29
VDD_APC27
VDD_APC28
VDD_APC29
VDD_APC30
DNC30
DNC31
DNC32
PDN:10Hz to 25MHz 45mヲ
VREG_S2_1P15
feedback to the pm8916 s2
C2813 C2814 C2815 C2816 C2817 C2818 C2819 C2820 C2821
82P 332 225 472 223 472 472 222 222
PDN:10Hz to 25MHz 78mヲ
VREG_S1_1P15
feedback to pm8916 S1
C2822 C2823 C2824 C2825 C2826 C2827 C2828 C2829
105 104 NC 104 104 NC 104 82P
U2501
PWR2
MSM8916
VDD_CORE1
VDD_CORE2
VDD_CORE3
VDD_CORE4
VDD_CORE5
VDD_CORE6
VDD_CORE7
VDD_CORE8
VDD_CORE9
VDD_CORE10
VDD_CORE11
VDD_CORE12
VDD_CORE13
VDD_CORE14
VDD_CORE15
VDD_CORE16
VDD_CORE17
VDD_CORE18
VDD_CORE19
VDD_CORE20
VDD_CORE21
VDD_CORE22
VDD_CORE23
VDD_CORE24
VDD_CORE25
DNC33
DNC34
PDN:10Hz to 25MHz 141mヲ
VREG_L2_1P2
C2830 C2831 C2832 C2833 C2834
104 104 104 105 105
VREG_L12_SDC
C2835
104
VDD_P1_1
VDD_P1_2
VDD_P1_3
VDD_P1_4
VDD_P1_5
VDD_P1_6
VDD_P1_7
VDD_P1_8
VDD_P1_9
VDD_P1_10
VDD_P2
VREG_L5_1P8
C2836 C2837 C2838 C2839
104 104 105 105
VDD_P3_1
DNC35
DNC36
VDD_P3_2
VDD_P3_3
VDD_P3_4
VDD_P3_5
VDD_P3_6
VDD_P3_7
VDD_P3_8
VDD_P3_9
VDD_P3_10
VDD_P3_11
VDD_P3_12
VDD_P3_13
VDD_P3_14
C2840 C2841 C2842
104 104 104
C2846
104
VDD_P4
UIM3
VREG_L14_UIM1
VDD_P5
UIM1
VREG_L15_UIM2
VDD_P6
UIM2
VDD_P7
EMMC
C2843 C2844 C2845
104 104 104

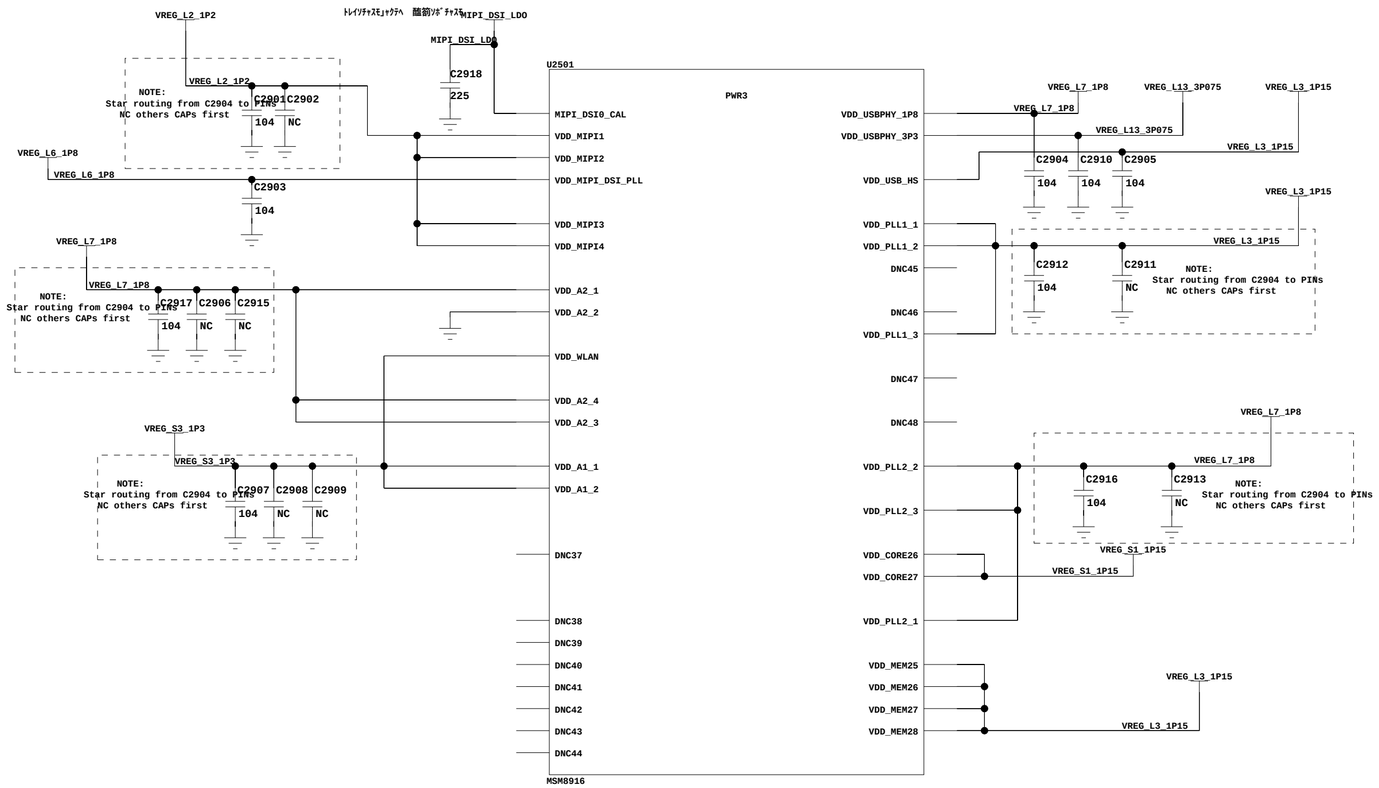
VREG_L2_1P2
NOTE:
Star routing from C2904 to PINs
NC others CAPs first
C2901
C2902
104
NC
VREG_L6_1P8
C2903
104
VREG_L7_1P8
C2917
C2906
C2915
VREG_S3_1P3
C2907
C2908
C2909
MIPI_DSI_LDO
C2918
225
U2501
PWR3
MIPI_DSI0_CAL
VDD_MIPI1
VDD_MIPI2
VDD_MIPI_DSI_PLL
VDD_MIPI3
VDD_MIPI4
VDD_A2_1
VDD_A2_2
VDD_WLAN
VDD_A2_4
VDD_A2_3
VDD_A1_1
VDD_A1_2
DNC37
DNC38
DNC39
DNC40
DNC41
DNC42
DNC43
DNC44
MSM8916
VDD_USBPHY_1P8
VDD_USBPHY_3P3
VDD_USB_HS
VDD_PLL1_1
VDD_PLL1_2
DNC45
DNC46
VDD_PLL1_3
DNC47
DNC48
VDD_PLL2_2
VDD_PLL2_3
VDD_CORE26
VDD_CORE27
VDD_PLL2_1
VDD_MEM25
VDD_MEM26
VDD_MEM27
VDD_MEM28
VREG_L7_1P8
VREG_L13_3P075
VREG_L3_1P15
C2904
C2910
C2905
C2912
C2911
C2916
C2913
VREG_S1_1P15

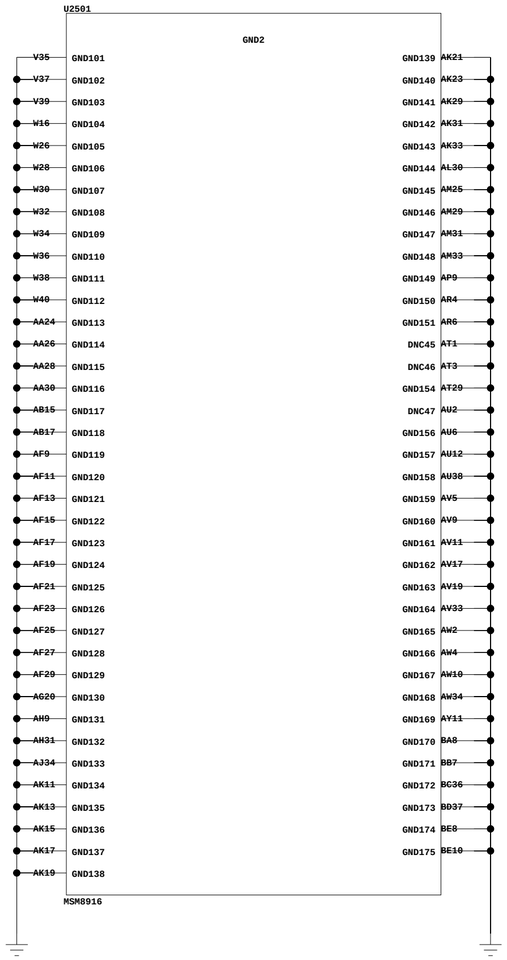
U2501
GND2
V35 GND101
V37 GND102
V39 GND103
W16 GND104
W26 GND105
W28 GND106
W30 GND107
W32 GND108
W34 GND109
W36 GND110
W38 GND111
W40 GND112
AA24 GND113
AA26 GND114
AA28 GND115
AA30 GND116
AB15 GND117
AB17 GND118
AF9 GND119
AF11 GND120
AF13 GND121
AF15 GND122
AF17 GND123
AF19 GND124
AF21 GND125
AF23 GND126
AF25 GND127
AF27 GND128
AF29 GND129
AG20 GND130
AH9 GND131
AH31 GND132
AJ34 GND133
AK11 GND134
AK13 GND135
AK15 GND136
AK17 GND137
AK19 GND138
GND139 AK21
GND140 AK23
GND141 AK29
GND142 AK31
GND143 AK33
GND144 AL30
GND145 AM25
GND146 AM29
GND147 AM31
GND148 AM33
GND149 AP9
GND150 AR4
GND151 AR6
DNC45 AT1
DNC46 AT3
GND154 AT29
DNC47 AU2
GND156 AU6
GND157 AU12
GND158 AU38
GND159 AV5
GND160 AV9
GND161 AV11
GND162 AV17
GND163 AV19
GND164 AV33
GND165 AW2
GND166 AW4
GND167 AW10
GND168 AW34
GND169 AY11
GND170 BA8
GND171 BB7
GND172 BC36
GND173 BD37
GND174 BE8
GND175 BE10
MSM8916

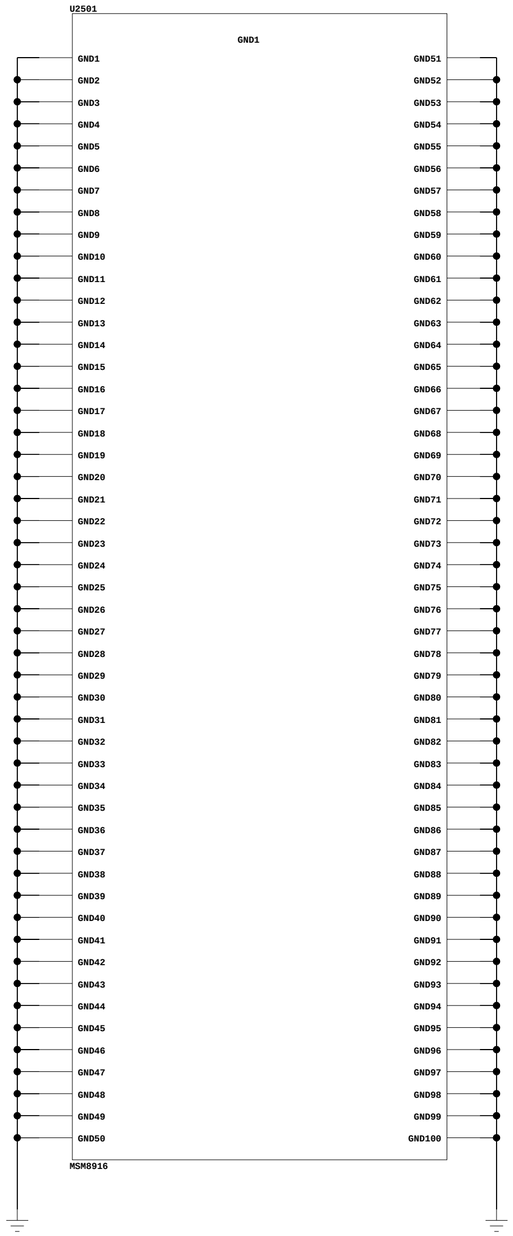
U2501
GND1
GND1
GND2
GND3
GND4
GND5
GND6
GND7
GND8
GND9
GND10
GND11
GND12
GND13
GND14
GND15
GND16
GND17
GND18
GND19
GND20
GND21
GND22
GND23
GND24
GND25
GND26
GND27
GND28
GND29
GND30
GND31
GND32
GND33
GND34
GND35
GND36
GND37
GND38
GND39
GND40
GND41
GND42
GND43
GND44
GND45
GND46
GND47
GND48
GND49
GND50
GND51
GND52
GND53
GND54
GND55
GND56
GND57
GND58
GND59
GND60
GND61
GND62
GND63
GND64
GND65
GND66
GND67
GND68
GND69
GND70
GND71
GND72
GND73
GND74
GND75
GND76
GND77
GND78
GND79
GND80
GND81
GND82
GND83
GND84
GND85
GND86
GND87
GND88
GND89
GND90
GND91
GND92
GND93
GND94
GND95
GND96
GND97
GND98
GND99
GND100
MSM8916

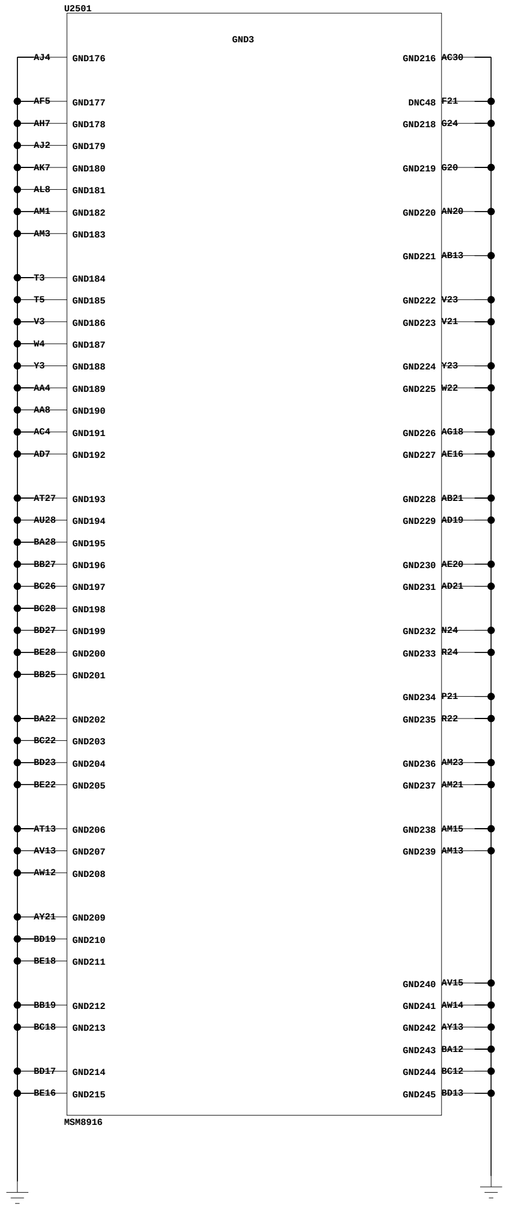
U2501
GND3
AJ4 GND176
AF5 GND177
AH7 GND178
AJ2 GND179
AK7 GND180
AL8 GND181
AM1 GND182
AM3 GND183
T3 GND184
T5 GND185
V3 GND186
W4 GND187
Y3 GND188
AA4 GND189
AA8 GND190
AC4 GND191
AD7 GND192
AT27 GND193
AU28 GND194
BA28 GND195
BB27 GND196
BC26 GND197
BC28 GND198
BD27 GND199
BE28 GND200
BB25 GND201
BA22 GND202
BC22 GND203
BD23 GND204
BE22 GND205
AT13 GND206
AV13 GND207
AW12 GND208
AY21 GND209
BD19 GND210
BE18 GND211
BB19 GND212
BC18 GND213
BD17 GND214
BE16 GND215
GND216 AC30
DNC48 F21
GND218 G24
GND219 G20
GND220 AN20
GND221 AB13
GND222 V23
GND223 V21
GND224 Y23
GND225 W22
GND226 AG18
GND227 AE16
GND228 AB21
GND229 AD19
GND230 AE20
GND231 AD21
GND232 N24
GND233 R24
GND234 P21
GND235 R22
GND236 AM23
GND237 AM21
GND238 AM15
GND239 AM13
GND240 AV15
GND241 AW14
GND242 AY13
GND243 BA12
GND244 BC12
GND245 BD13
MSM8916

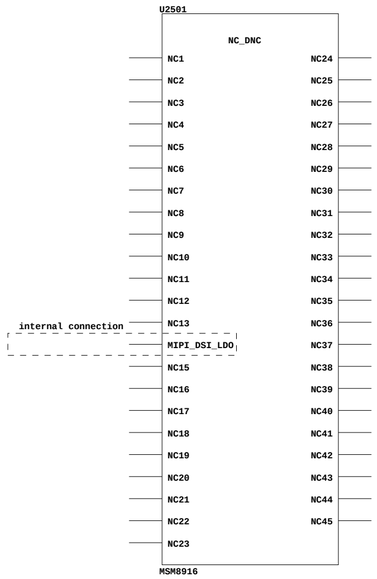
U2501
NC_DNC
NC1
NC2
NC3
NC4
NC5
NC6
NC7
NC8
NC9
NC10
NC11
NC12
NC13
MIPI_DSI_LDO
NC15
NC16
NC17
NC18
NC19
NC20
NC21
NC22
NC23
NC24
NC25
NC26
NC27
NC28
NC29
NC30
NC31
NC32
NC33
NC34
NC35
NC36
NC37
NC38
NC39
NC40
NC41
NC42
NC43
NC44
NC45
internal connection
MSM8916

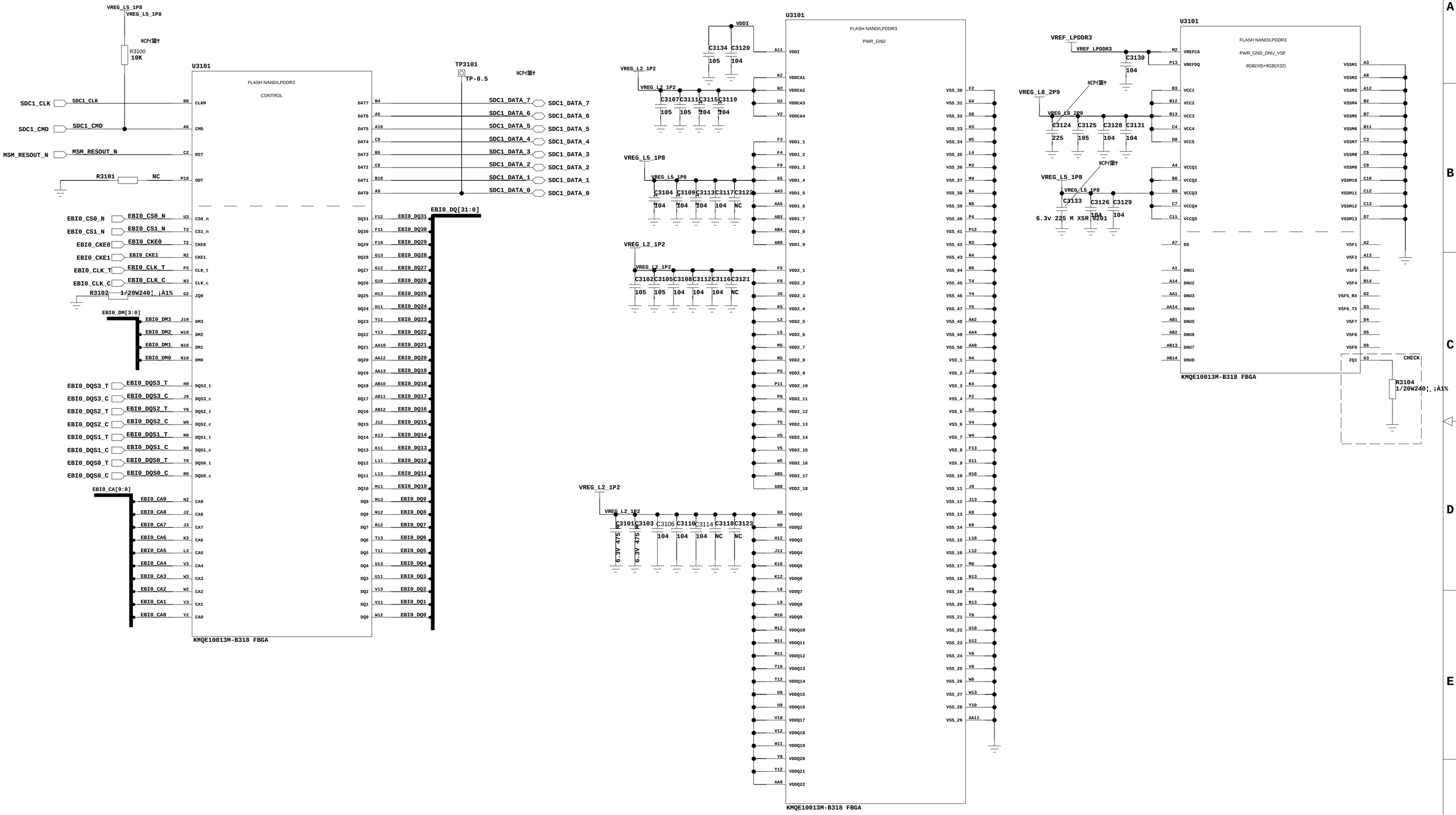
U3101
FLASH NAND/LPDDR3
CONTROL
KMQE10013M-B318 FBGA
VREG_L5_1P8
R3100
10K
MCP代號
SDC1_CLK
SDC1_CMD
MSM_RESOUT_N
R3101
NC
R3102
1/20W240¦¸ ¡À1%
EBI0_CS0_N
EBI0_CS1_N
EBI0_CKE0
EBI0_CKE1
EBI0_CLK_T
EBI0_CLK_C
EBI0_DM[3:0]
EBI0_DQS3_T
EBI0_DQS3_C
EBI0_DQS2_T
EBI0_DQS2_C
EBI0_DQS1_T
EBI0_DQS1_C
EBI0_DQS0_T
EBI0_DQS0_C
EBI0_CA[9:0]
TP3101
TP-0.5
SDC1_DATA_7
SDC1_DATA_6
SDC1_DATA_5
SDC1_DATA_4
SDC1_DATA_3
SDC1_DATA_2
SDC1_DATA_1
SDC1_DATA_0
EBI0_DQ[31:0]
U3101
FLASH NAND/LPDDR3
PWR_GND
KMQE10013M-B318 FBGA
VDDI
VREG_L2_1P2
VREG_L5_1P8
C3134 C3120
105 104
C3107 C3111 C3115 C3119
105 105 104 104
C3104 C3109 C3113 C3117 C3122
104 104 104 104 NC
C3102 C3105 C3108 C3112 C3116 C3121
105 105 104 104 104 NC
C3101 C3103 C3106 C3110 C3114 C3118 C3123
6.3V 475 6.3V 475 104 104 104 NC NC
U3101
FLASH NAND/LPDDR3
PWR_GND_DNU_VSF
8GB(X8)+8GB(X32)
KMQE10013M-B318 FBGA
VREF_LPDDR3
C3130
104
VREG_L8_2P9
C3124 C3125 C3128 C3131
225 105 104 104
C3133 C3126 C3129
6.3v 225 M X5R 0201 104 104
CHECK
R3104
1/20W240¦¸ ¡À1%

SPEAKER PA

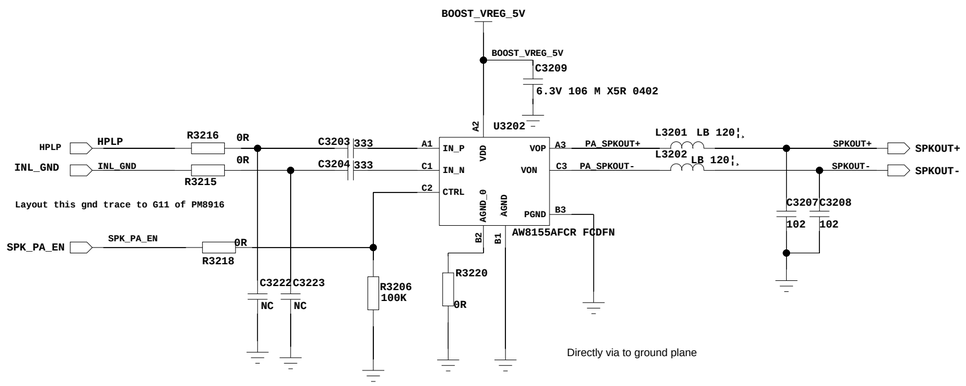

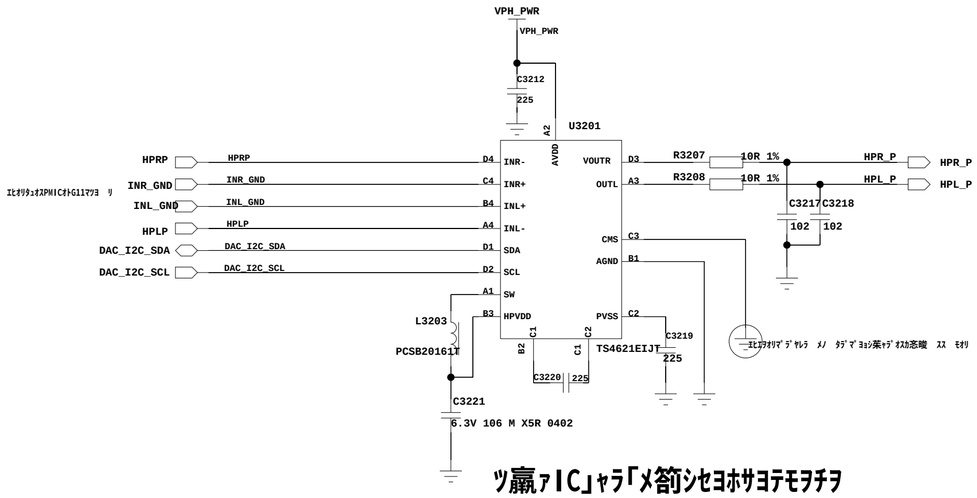

ツ贏ァIC」ャラ「メ箚シセヨホサヨテモヲチヲ

YDA_5v_POWER

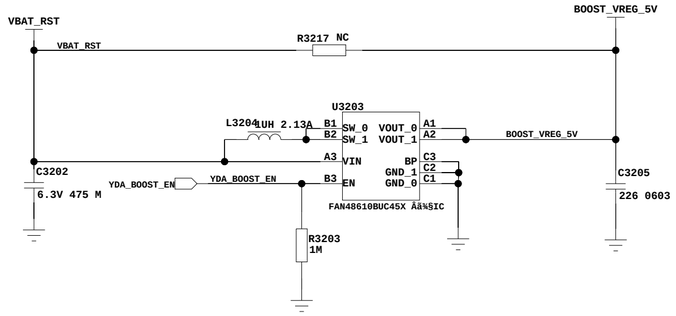

¶ú»ú×ù

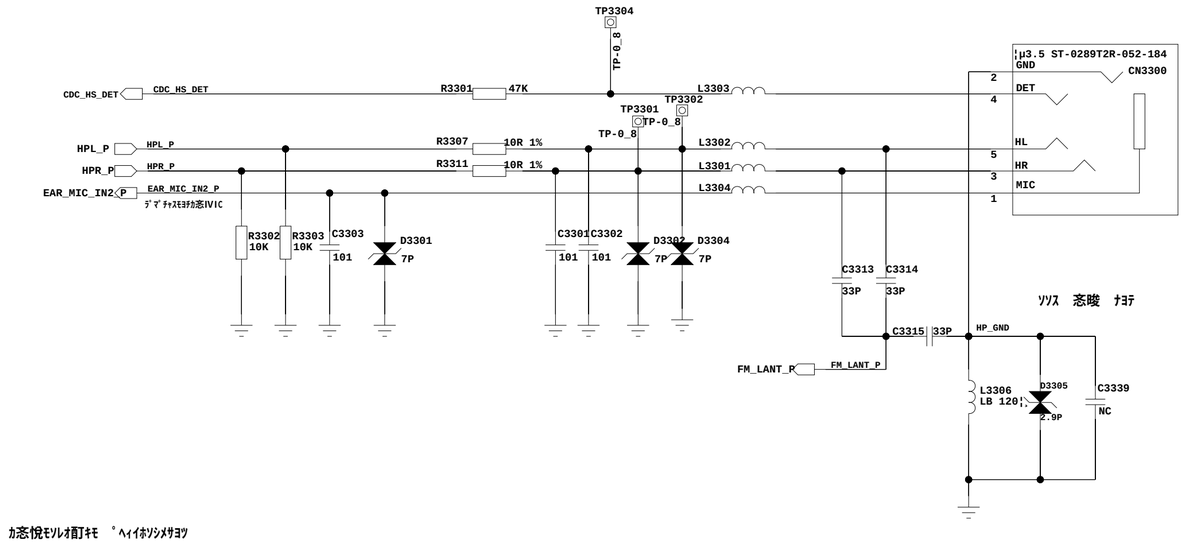

HP MIC

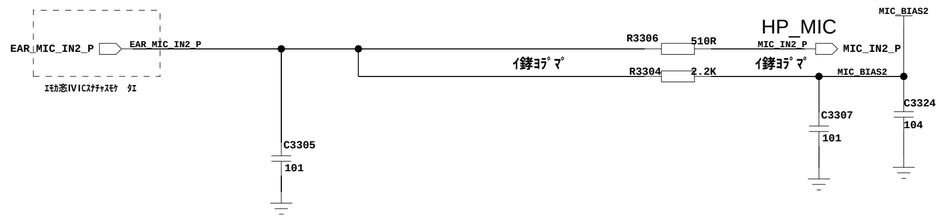

SUBBOARD CONN

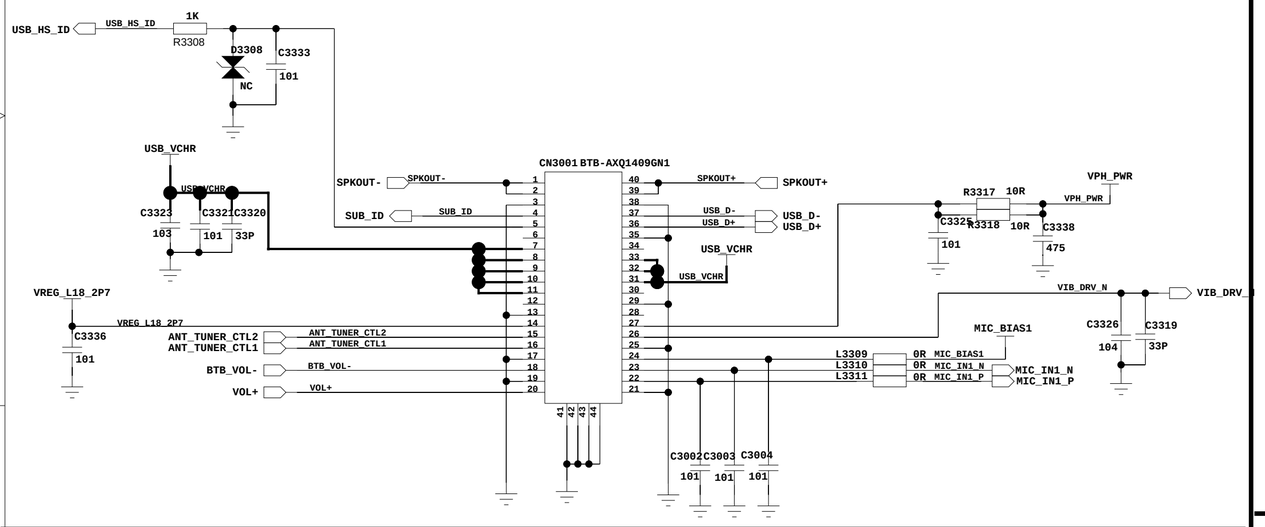

RGB LED DRIVER

Receiver

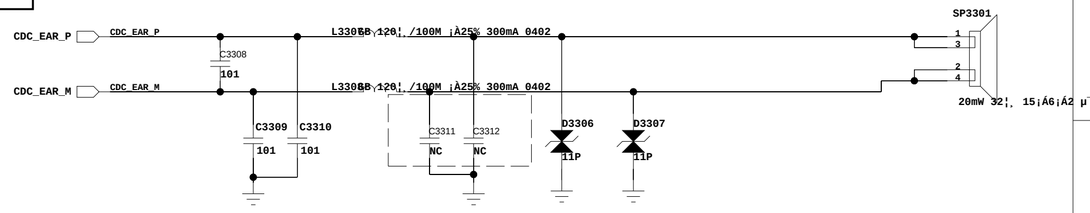

LCD 。ﾀ5V Driver

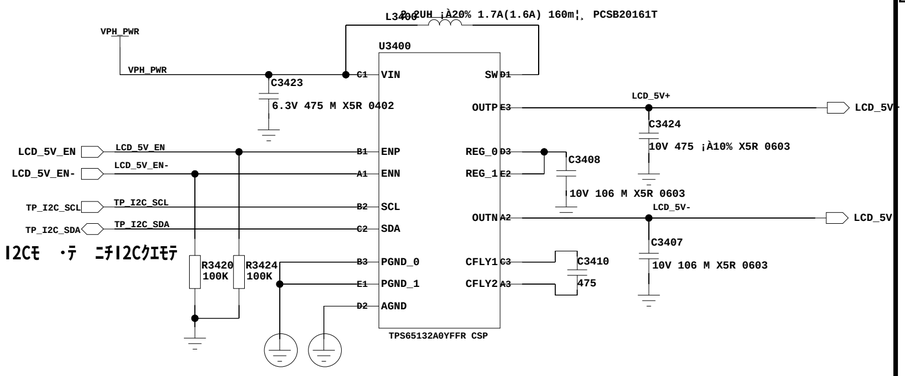

I2Cﾓ ･ﾃ ﾆﾁI2Cｸｴﾓﾃ

ｵ醸ｴｵﾘﾄ」ﾄ箏ﾘｷﾖｼｪﾏﾂﾖ ﾘ

tps65132 slave address 0X3E

LCM CONN

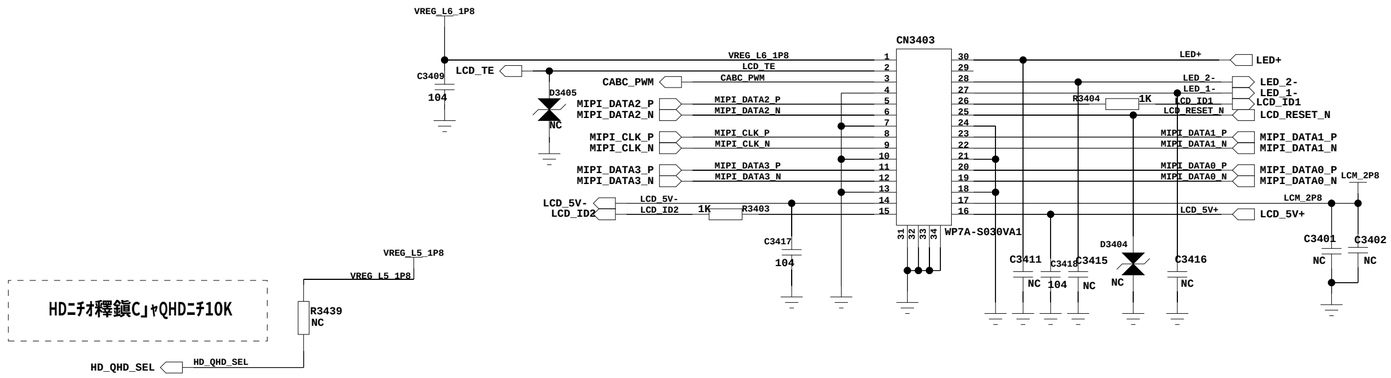

LCD LDO

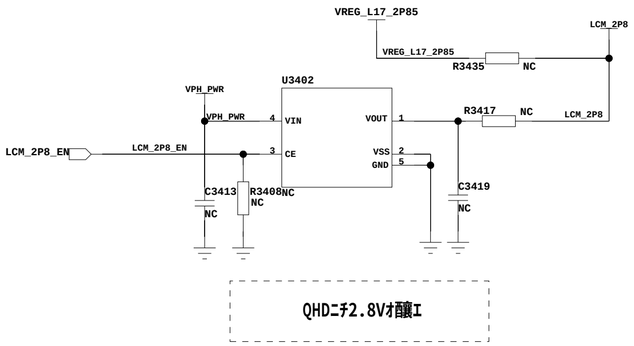

LCD BACKLIGHT

LM3630A slave address」ｺ0x38

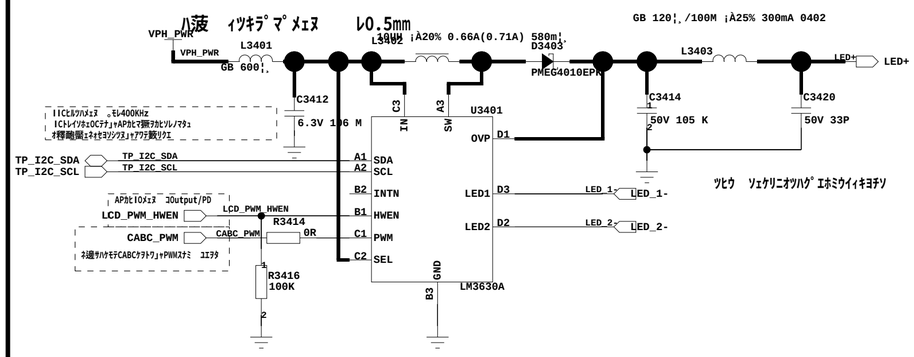

LCM CONN EMI

MIPIｲ築ﾔｵ贏。ﾁﾉｿｿｽ鮓TBｶﾋ

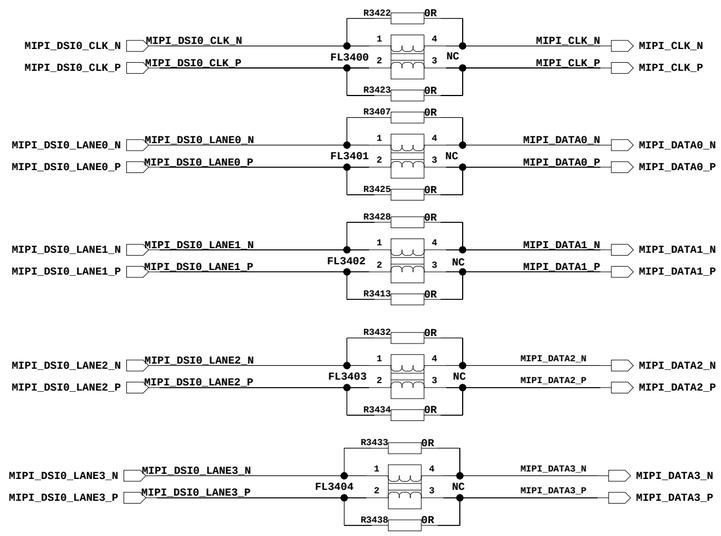

USB SWITCH

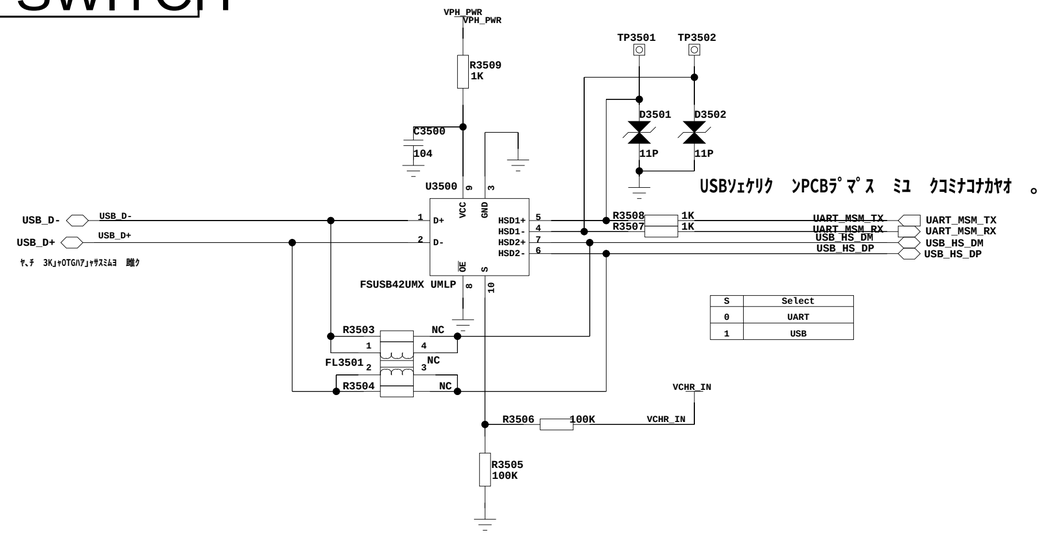

USBｿｪｹﾘｸ ﾝPCBﾗﾞﾏﾞｽ ﾐｺ ｸｺﾐﾅｺﾅｶﾔｵ 。

S	Select
0	UART
1	USB

UPDATE

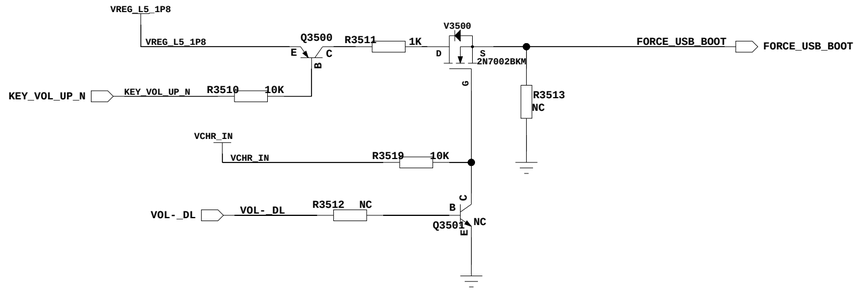

ﾏﾂﾔﾘﾄ｣ﾊｽｲ簗ﾔｵ罐ｺｸﾞｵ酥ｽﾓﾐﾐｧ

OVP

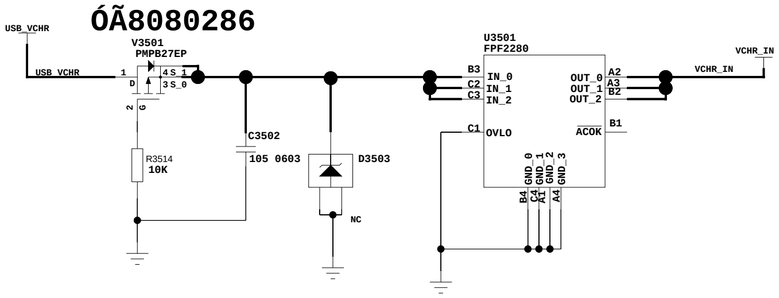

UVLOｽﾓｵﾘ｣ｬﾖｯｸ35V｢ｲｾ酥

Test Confige

ﾗﾛｲ簟｣ﾗｼｲ簗ﾔｵ

BOOT MODE

CONF_0	CONF_1	Mode
0	0	Factory Mode
0	1	WLAN Final Test
1	0	RF mode
1	1	Ordinary Power On

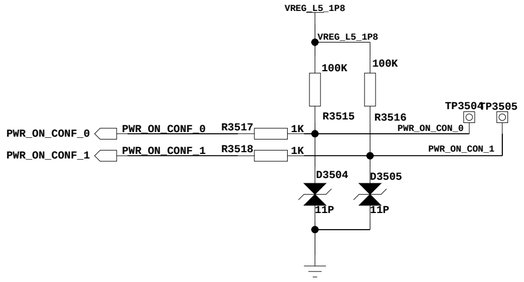

TEST POINT

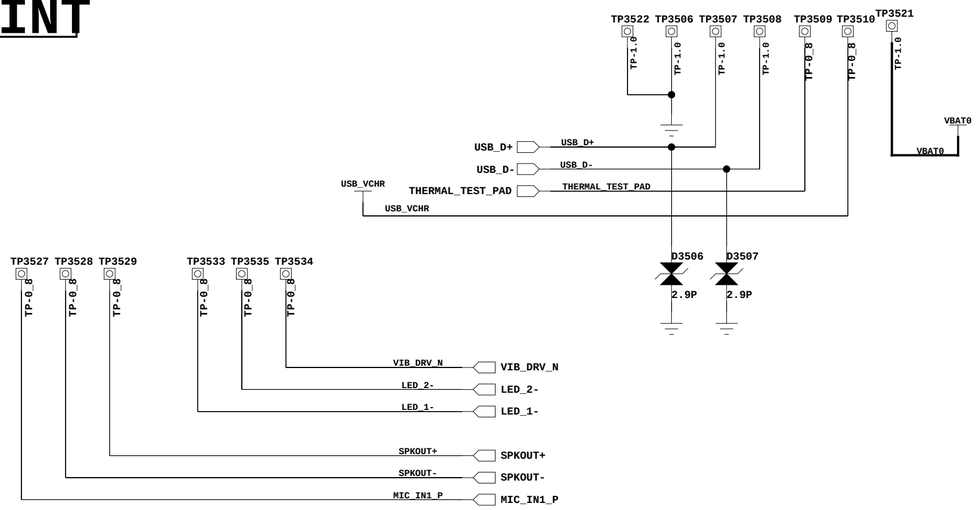

JTAG DEBUG

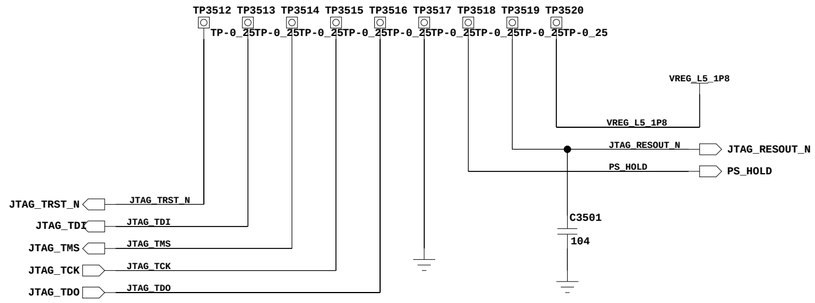

G-sensor

LIS3DH Slave address 0X19(0011001)

ﾊｹﾓﾃMMA8452Q ﾊﾞ7C3602 ﾊﾞﾓﾃ104 ｵ酳ﾝ｣ｬﾊｹﾓﾃLIS3DHｻ ｰADXL346ﾊﾞ7C3602 NC

SAO ｿﾉﾓﾃｴI/ﾓﾍｺｴｻｺｴｻｺﾃｵ酳ｽﾊﾞ7ｵｻｵﾘｺｴｻｺﾃMMA8452Q ｺ^ADXL346ﾓﾄ7ｵｻｵﾘｺｴｻｺ ｺ0x1D｣ｬLIS3DHﾓﾄ7ｵｻｵﾘｺｴｻｺ±0x19

SAO ｽﾓｵﾍｵ酳ｽﾊﾞ7｣ｬMMA8452Q ｺ^ADXL346ﾓﾄ7ｵｻｵﾘｺｴｻｺ ｺ0x1C｣ｬLIS3DHﾓﾄ7ｵｻｵﾘｺｴｻｺ±0x18

IICｦ÷¼þ¶ËEVT½×¶Ï´®Áª0Rµç×è£¬ÈçÎÞÎÊÌâ£¬PVT¶Ì½ÓÈ¥µô¡£

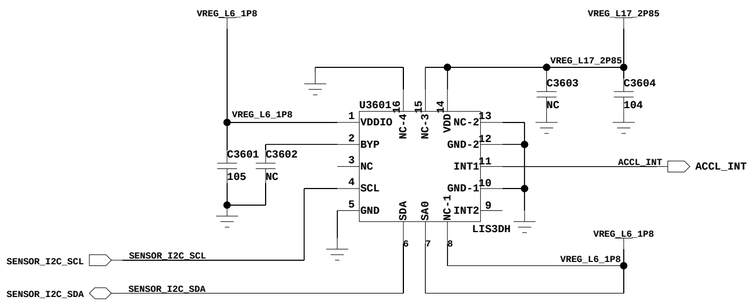

IICｦ÷¼þ¶ËEVT½×¶Ï´®Áª0Rµç×è£¬
ÈçÎÞÎÊÌâ£¬PVT¶Ì½ÓÈ¥µô¡£

LIS3DH slave address 0X19

CTP COB

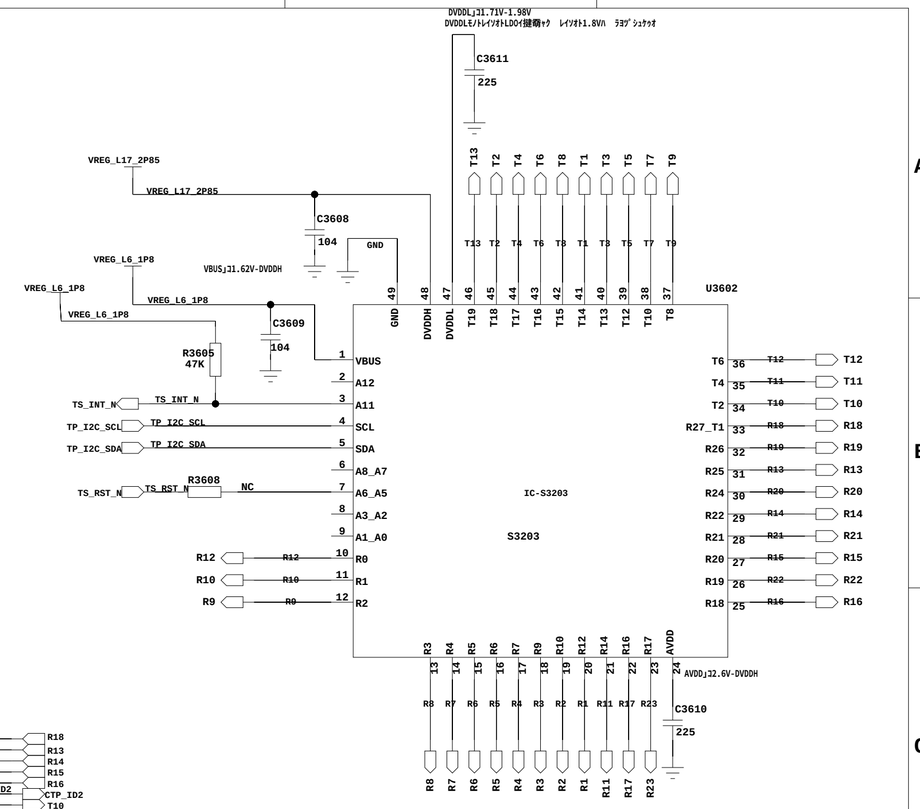

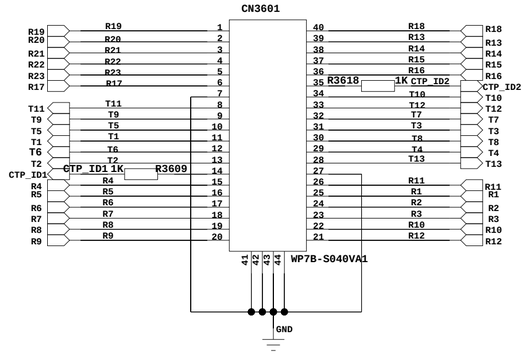

M-sensor

MMC3416 slave address 0X30

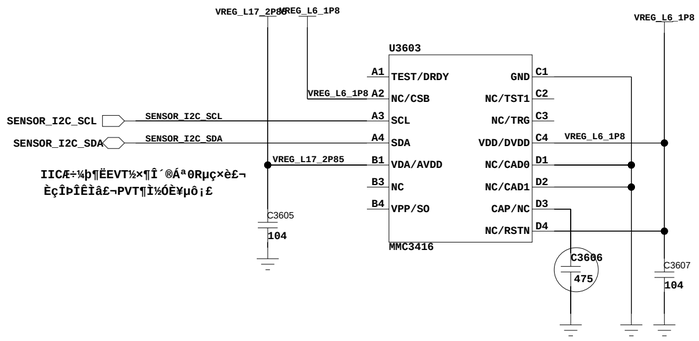

IICｦ÷¼þ¶ËEVT½×¶Ï´®Áª0Rµç×è£¬
ÈçÎÞÎÊÌâ£¬PVT¶Ì½ÓÈ¥µô¡£

ﾊｹﾓﾃAK8963Cｺﾍ YAS533ﾊﾞ7｣ｬｵ酳ﾝC3606 NC｡｣ﾊｹﾓﾃMMC3416｣ｬC3606ﾎｴ475ｵ酳ﾝ

ﾊｹﾓﾃAK8963Cｺﾍ YAS533ﾊﾞ7｣ｬｵ酳ﾝC3606 NC｡｣

A.L.S.+P.S sensor module

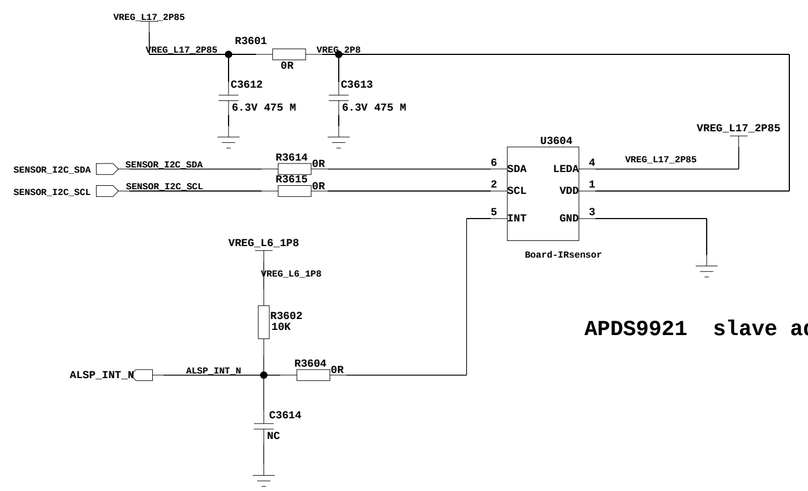

APDS9921 slave address 0x53

SIM1 Card

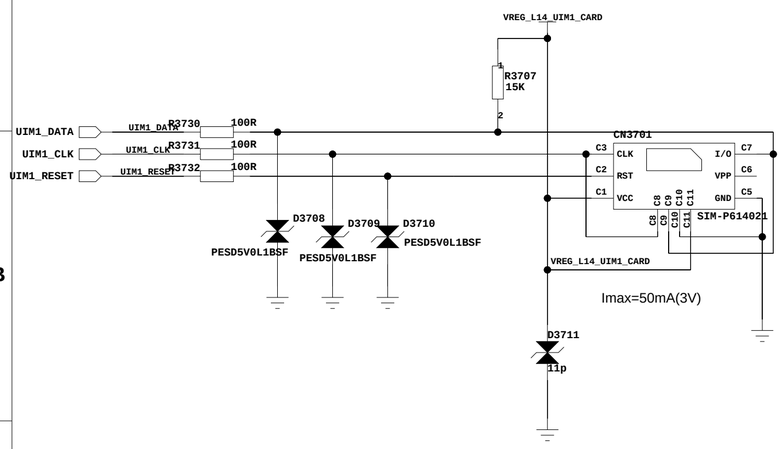

SIM2 Card

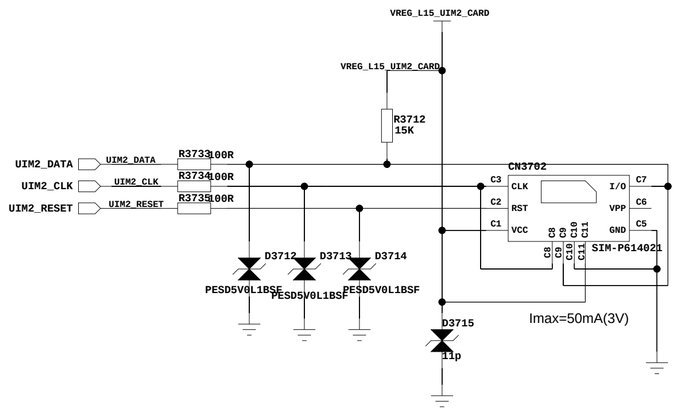

TF_CARD

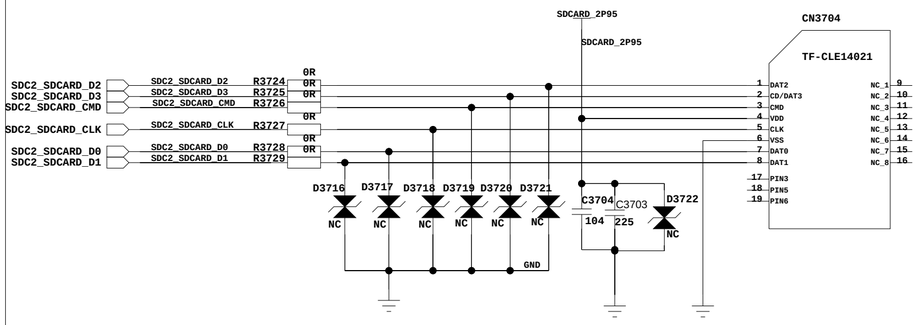

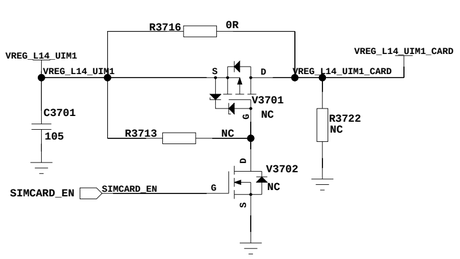

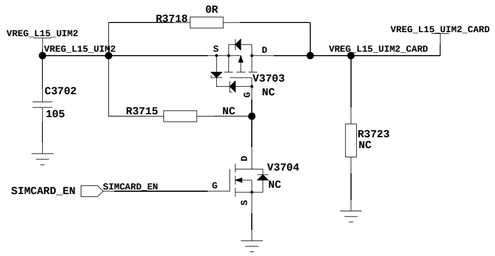

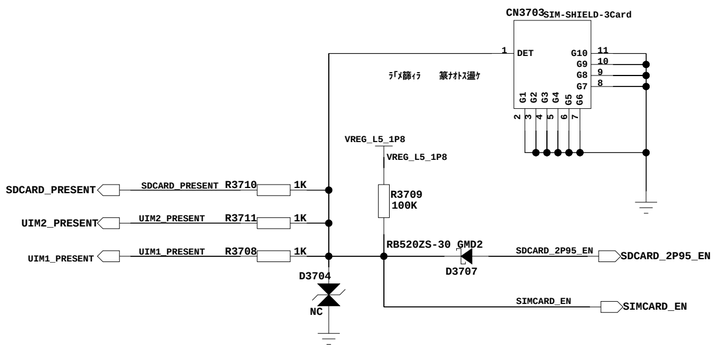

TF_LDO

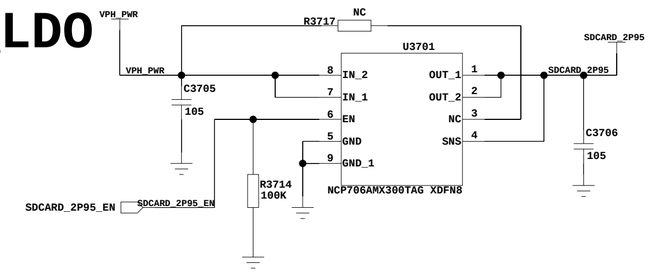

10K/24K ﾗ触ﾏ貶ｼﾉ備ﾆ

POWER&VOL KEY

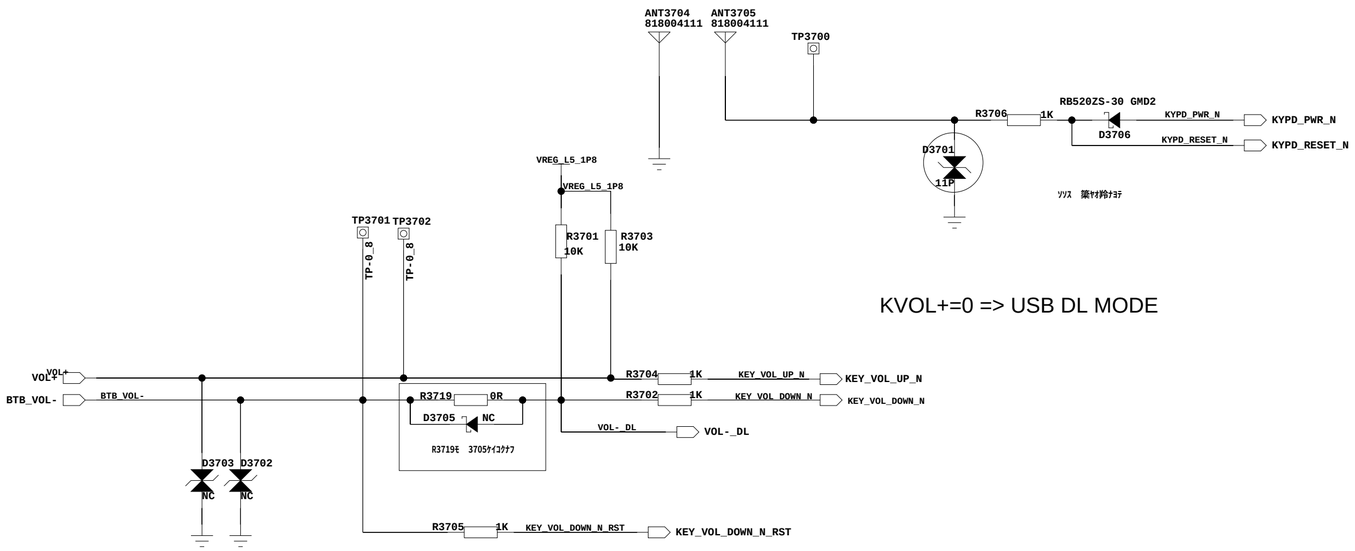

MAIN_Camera

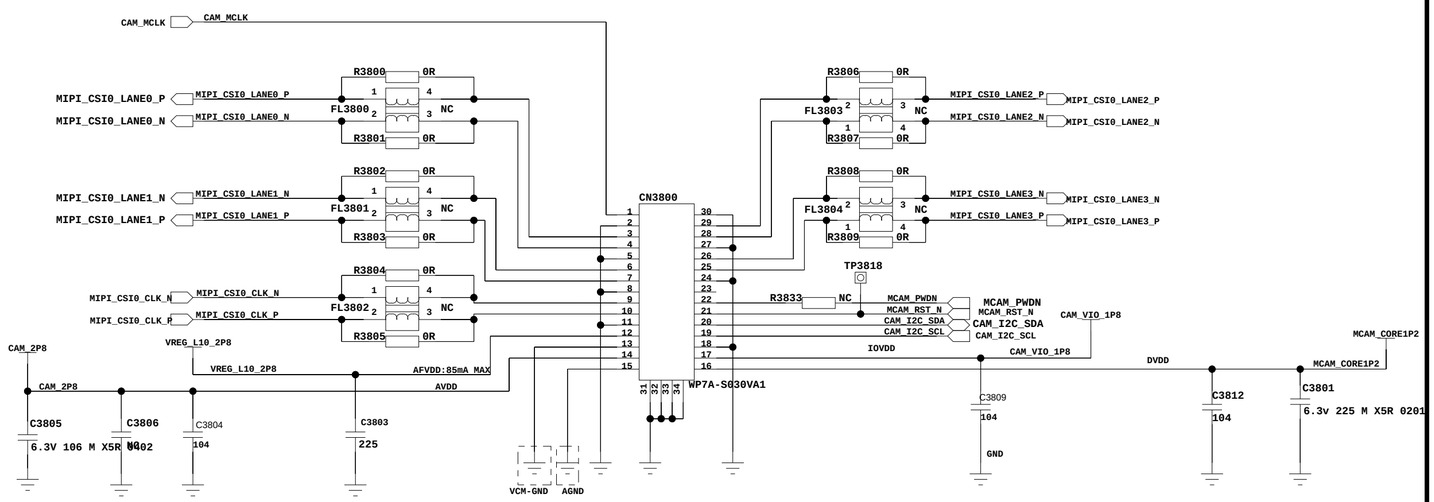

IMX179 slave address 0X21

SUB_Camera

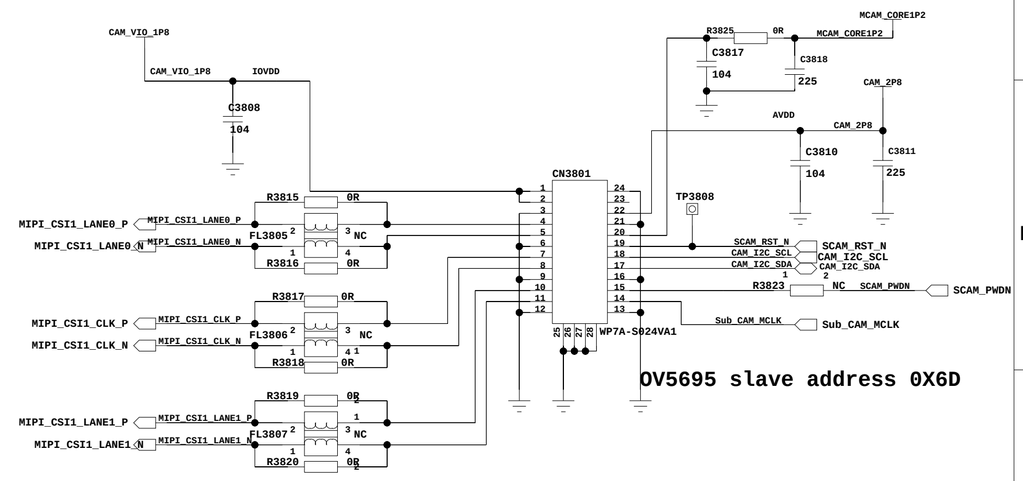

OV5695 slave address 0X6D

Camera_LDO

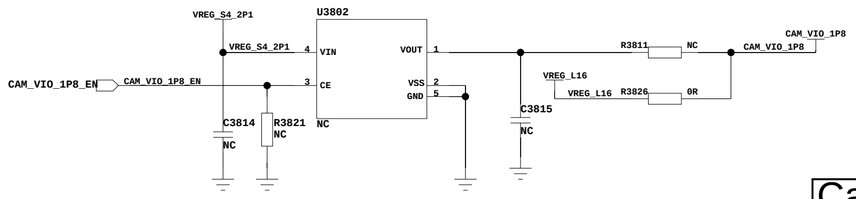

Camera_VDDIO

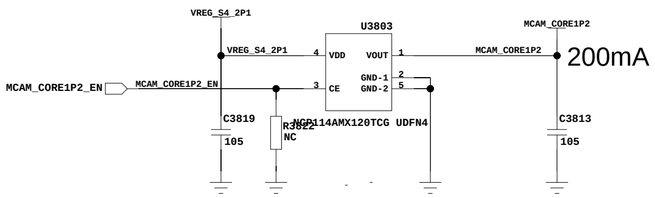

Camera_DVDD

Flash LED Driver

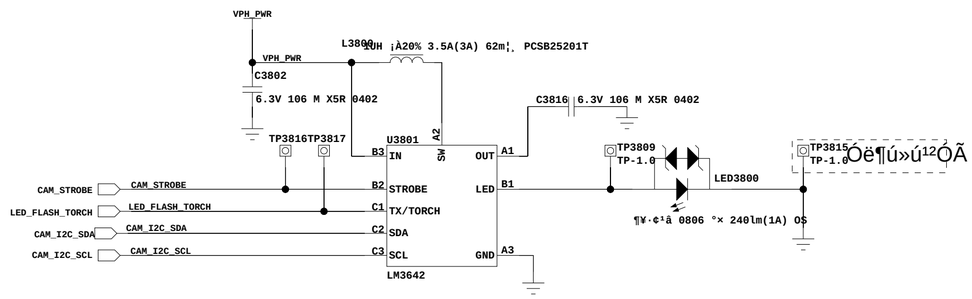

LM3642 slave address 0X63

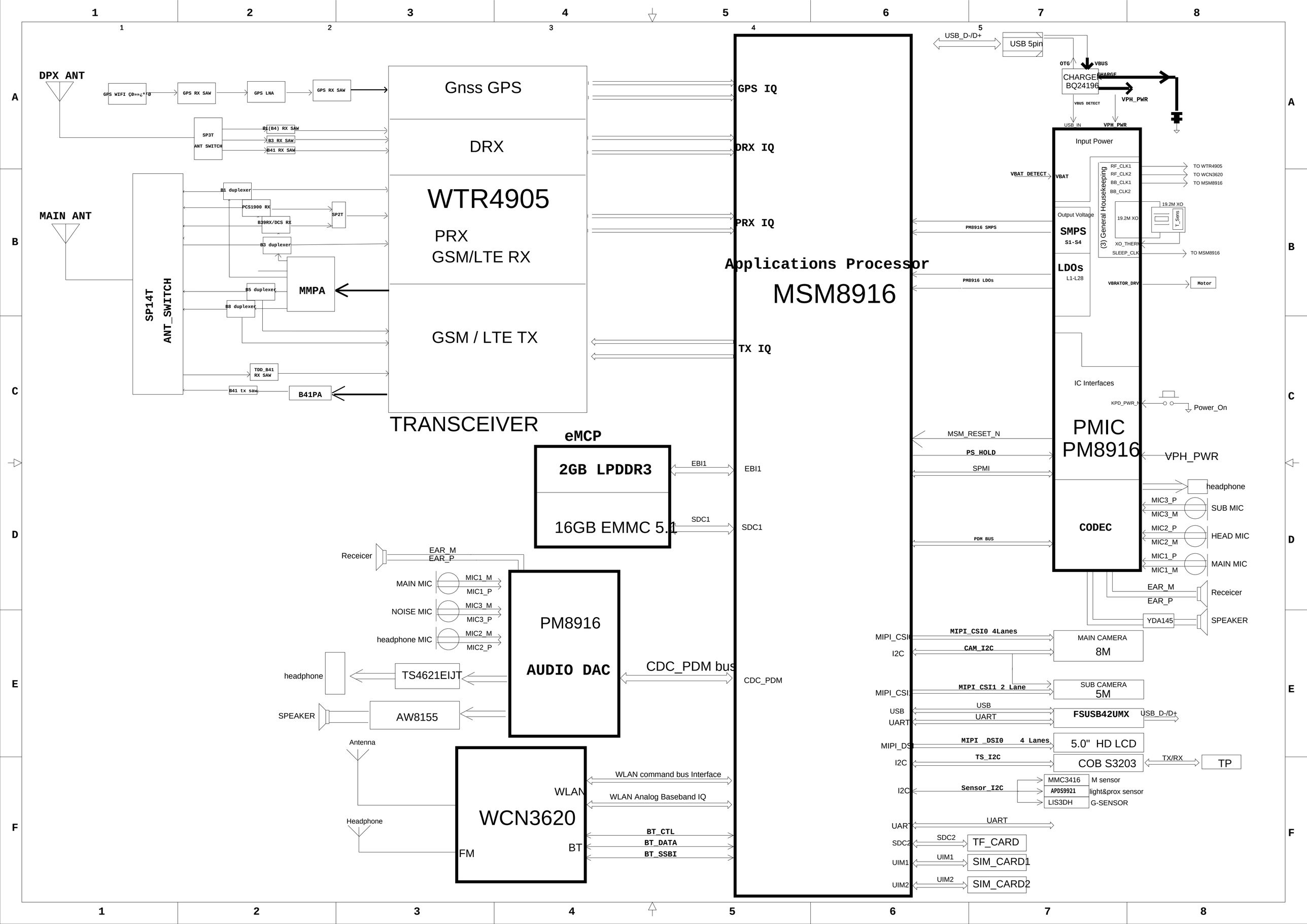
DPX ANT
GPS WIFI ÇÐ»»¿ª¹Ø
GPS RX SAW
GPS LNA
GPS RX SAW
SP3T
ANT SWITCH
B1(B4) RX SAW
B3 RX SAW
B41 RX SAW
MAIN ANT
SP14T
ANT_SWITCH
B1 duplexer
PCS1900 RX
B39RX/DCS RX
SP2T
B3 duplexer
MMPA
B5 duplexer
B8 duplexer
TDD_B41
RX SAW
B41 tx saw
B41PA
Gnss GPS
DRX
WTR4905
PRX
GSM/LTE RX
GSM / LTE TX
TRANSCEIVER
GPS IQ
DRX IQ
PRX IQ
TX IQ
Applications Processor
MSM8916
USB_D-/D+
USB 5pin
OTG
VBUS
CHARGER
BQ24196
CHARGE
VPH_PWR
VBUS DETECT
USB_IN
VPH_PWR
Input Power
VBAT_DETECT
VBAT
RF_CLK1
RF_CLK2
BB_CLK1
BB_CLK2
TO WTR4905
TO WCN3620
TO MSM8916
(3) General Housekeeping
19.2M XO
T_Sens
Output Voltage
SMPS
S1-S4
XO_THERM
SLEEP_CLK
TO MSM8916
PM8916 SMPS
LDOs
L1-L28
PM8916 LDOs
VBRATOR_DRV
Motor
IC Interfaces
KPD_PWR_N
Power_On
PMIC
PM8916
MSM_RESET_N
PS_HOLD
SPMI
VPH_PWR
CODEC
headphone
MIC3_P
MIC3_M
SUB MIC
MIC2_P
MIC2_M
HEAD MIC
MIC1_P
MIC1_M
MAIN MIC
PDM BUS
EAR_M
EAR_P
Receicer
YDA145
SPEAKER
eMCP
2GB LPDDR3
16GB EMMC 5.1
EBI1
SDC1
Receicer
EAR_M
EAR_P
MAIN MIC
MIC1_M
MIC1_P
NOISE MIC
MIC3_M
MIC3_P
headphone MIC
MIC2_M
MIC2_P
PM8916
AUDIO DAC
CDC_PDM bus
CDC_PDM
headphone
TS4621EIJT
SPEAKER
AW8155
MIPI_CSI0
MIPI_CSI0 4Lanes
I2C
CAM_I2C
MAIN CAMERA
8M
MIPI_CSI1
MIPI_CSI1 2 Lane
SUB CAMERA
5M
USB
UART
FSUSB42UMX
USB_D-/D+
MIPI_DSI
MIPI _DSI0 4 Lanes
5.0" HD LCD
I2C
TS_I2C
COB S3203
TX/RX
TP
I2C
Sensor_I2C
MMC3416
M sensor
APDS9921
light&prox sensor
LIS3DH
G-SENSOR
Antenna
Headphone
WCN3620
WLAN
FM
BT
WLAN command bus Interface
WLAN Analog Baseband IQ
BT_CTL
BT_DATA
BT_SSBI
UART
SDC2
TF_CARD
UIM1
SIM_CARD1
UIM2
SIM_CARD2